Construction and working characteristics

The modular air service units groups of the size 4, as the other size, allow a wide selection of combinations.
The threaded connections are machined directly on the valve body made with light alloy, so that each components can be used individually.
The wall fixing is done directly with screws through the holes on the body they can be wall mounted.
The bowls are made of transparent technopolymer, always supplied with shock resistant technopolymer protection, allowing the moisture and oil level control from any angle.
The filter can be equipped with manual or semiautomatic water drain valve; furthermore it's possible to install the automatic draining device inside the bowl.
The pressure regulator handle is lockable in the desired position.
The lubricator oil flow is adjustable with proper handle and it is visibly checked through the sight dome.
The shut-off valve can be equipped with pad-lock to prevent accidents or damages due to unauthorized operation.
The progressive start-up valve, pneumatically or electropneumatically controlled, allows air supply to the circuit progressively and with adjustable time.

Instruction for installation and operation

Pay attention to install a group or a single component with air flow direction according to the arrows and to the following sequence: filter, pressure regulator, lubricator and with bowls downwards.
Do not exceed the recommended air pressure and temperature limits.
The moisture should not exceed the level marked on the bowl and it can be drawn off and carried away by a flexible tube of Ø 6/4 directly connected to the discharge valve handle.
The pressure should be set from minimum to maximum, rotating the adjusting handle clockwise.
As lubricant, we suggest to use oil class FD22 or HG32. Verify that the lubricator is not fed with a flow lower than the minimum operational.
To set the oil flow rotate the proper adjusting handle in order to get one drop of oil every 300-600 liters of air.
The oil flow will be kept automatically and proportionally to the air flow.
The oil can be refilled by mean of proper plug or directly into the bowl after having de-pressurized the system. Do not exceed the maximum level indicated on the bowl.
For opening the shut-off valve push and rotate clockwise the operating handle. For closing it and consequently discharging the down stream line, rotate the handle counter-clockwise.

Maintenance

Clean the bowls with water and detergent. Do not use alcohol.
The filter element made with HPDE is reusable by blowing and cleaning it with proper detergent. For replacing or cleaning it, remove the bowl and unscrew the baffle spins.
In case it is necessary to replace the lubricator transparent dome, tight it at 5 Nm torque maximum.

Assembling

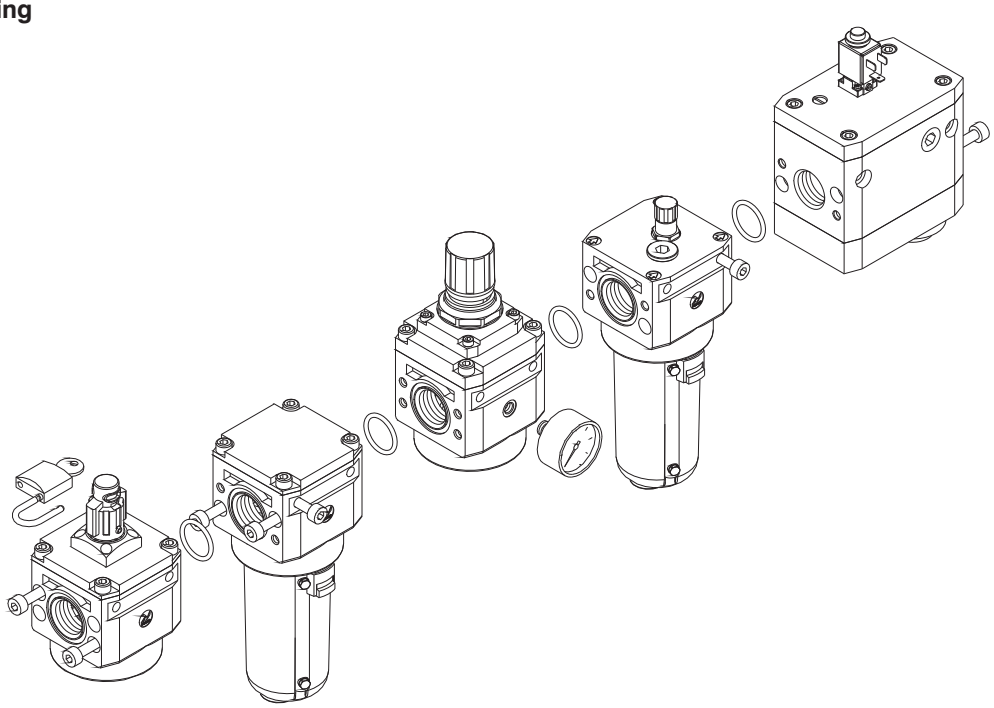

Filter

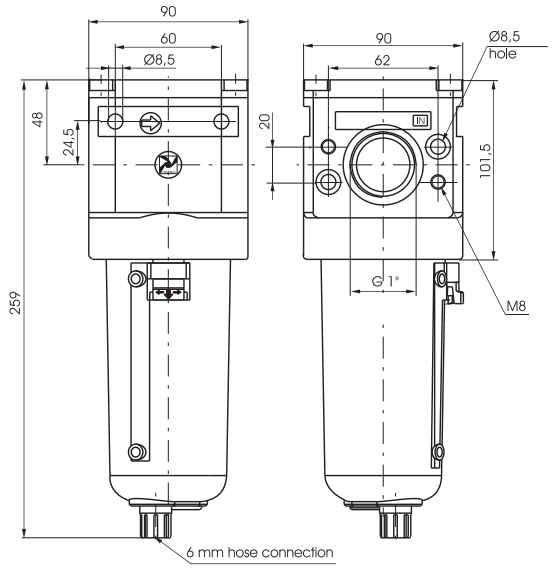

Ordering code

17401B.Ⓢ.Ⓣ

Ⓢ	FILTER PORE SIZE
	A = 5μ
	B = 20μ
	C = 50μ
Ⓣ	TYPE
	S = Automatic drain

Example: 17401B.B
Filter with G 1" connections and filter pore size 20μ.

Flow rate curves

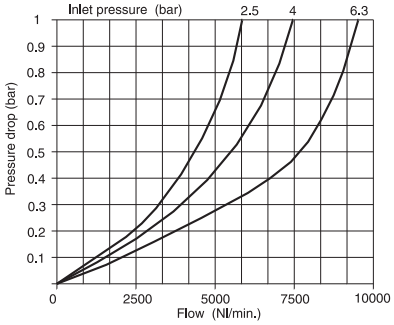

Operating Characteristics

- Body made with light alloy.
- Wall mounting possibility with M8 screws protected by covers.
- Double filtering action: by air centrifuging and by replaceable and reusable HDPE porous filter element.
- Light alloy bowl c/w level indicator connected to the body with bayonet cap and safety button.
- Manual and semi-automatic water drain valve; in the semi-automatic version the drainage happens when there is no pressure or by pushing the valve up-wards.
- Automatic water drainage bowl available on request.

Technical characteristics

Connections	G 1"
Max working pressure (bar)	13 bar - 1,3 MPa
Minimum working pressure with automatic drain (bar)	0,5
Maximum working pressure with automatic drain (bar)	10
Temperature °C	50°C
Weight	gr. 1700
Filter pore size	5μ - 20μ - 50μ
Bowl capacity	178 cm³
Assembly position	Vertical
Wall fixing screw	M8

Coalescing filter

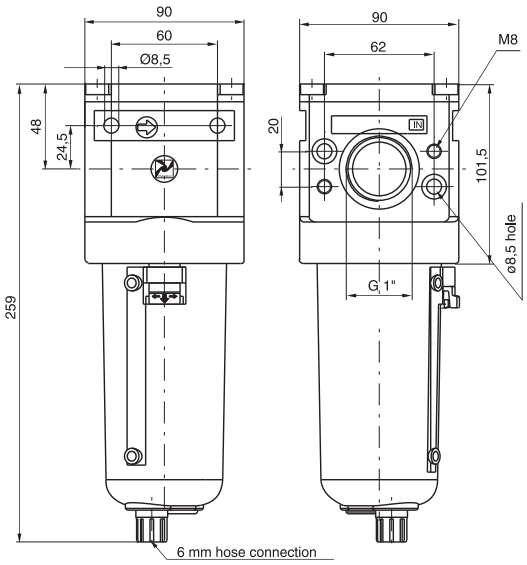

Ordering code

17408B.E.Ⓣ

Ⓣ	TYPE
	S = Automatic drain

Example: 17408B.E
Coalescing filter size 4 with G 1" connections and filter efficiency of 99,97%.

Flow rate curves

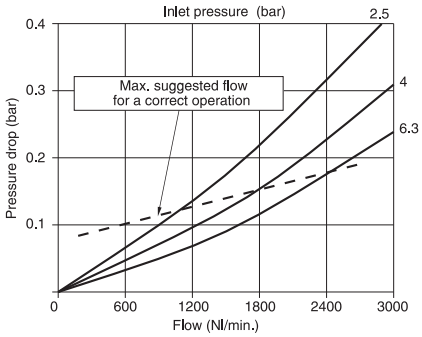

Operating Characteristics

- Coalescing filter element remove 0,01μ particles equivalent to 99,97%.
- Body made with light alloy.
- Wall mounting possibility with M8 screws protected by covers.
- Light alloy bowl c/w level indicator connected to the body with bayonet cap and safety button.
- Manual and semi-automatic water drain valve; in the semi-automatic version the drainage happens when there is no pressure or by pushing the valve up-wards.
- Automatic water drainage bowl available on request.

Technical characteristics

Connections	G 1"
Max working pressure (bar)	13 bar - 1,3 MPa
Minimum working pressure with automatic drain (bar)	0,5
Maximum working pressure with automatic drain (bar)	10
Temperature °C	50°C
Weight	gr. 1700
Filter efficiency with 0,01μ particle	99,97%
Bowl capacity	178 cm^3
Assembly position	Vertical
Wall fixing screw	M8

3

Pressure regulator

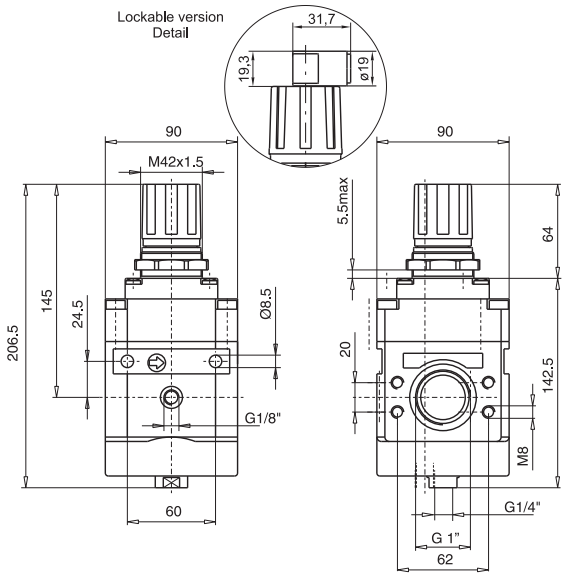

Ordering code

17402NB.Ⓖ.Ⓞ

Ⓖ	ADJUSTING RANGE
	A = 0 - 2 bar
	B = 0 - 4 bar
	C = 0 - 8 bar
	D = 0 - 12 bar
Ⓞ	OPTION
	*Standard
	K = Lockable version

* No additional letters required

Example: 17402NB.C
Pressure regulator with G 1" connections, adjusting range 0 - 8 bar with relieving.

Flow rate curves

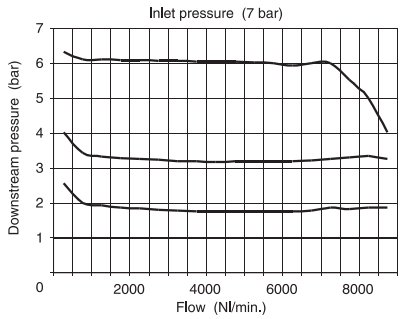

Adjustment characteristics

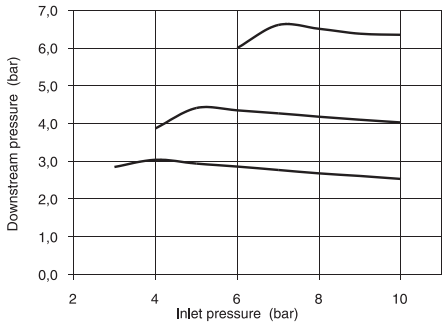

Operating Characteristics

- Sensitivity combined with high relieving rates.
- High flow rate with extremely low pressure drop.
- Body made with light alloy.
- Two pressure gauge connections with plug complete of seal.
- Ring nut for panel mounting.

Technical characteristics

Connections	G 1"
Max working pressure (bar)	13 bar - 1,3 MPa
Temperature °C	50°C
Pressure gauge connections	G 1/8"
Weight	gr. 1900
Pressure range (bar)	0 - 2 / 0 - 4 / 0 - 8 / 0 - 12
Assembly position	Any
Wall fixing screw	M8

Piloted pressure regulator

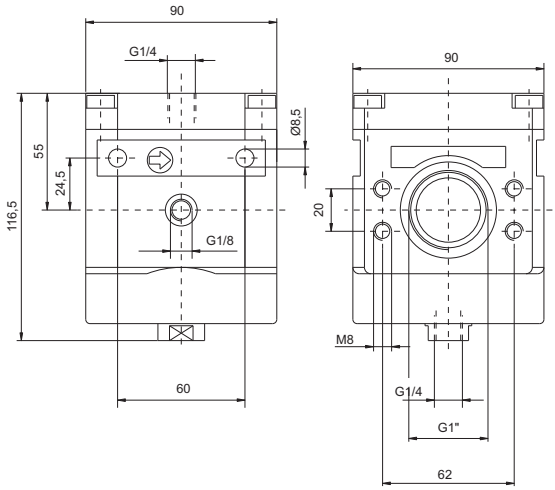

Ordering code

17402NB.P

Example: 17402NB.C
Piloted pressure regulator with G 1" connection and adjusting range 0 - 8 bar with relieving

Flow rate curves

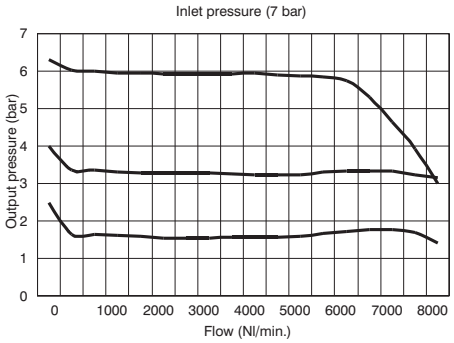

Adjustment characteristics

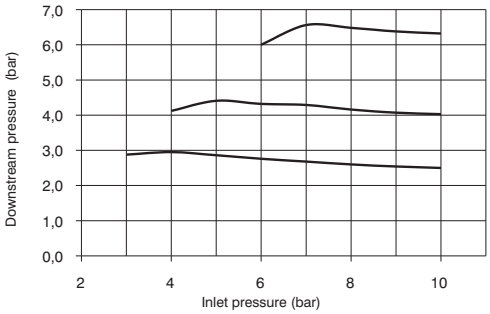

Piloting curves

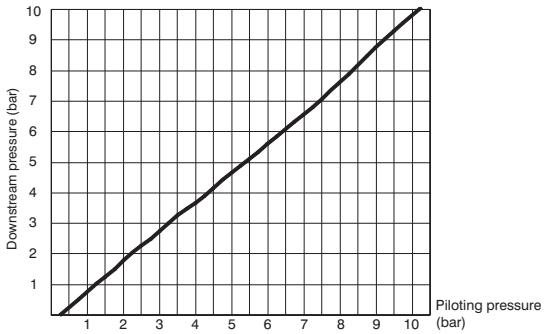

Operating Characteristics

- Sensitivity combined with high relieving rates.
- High flow rate with extremely low pressure drop.
- Body made with light alloy.
- Two pressure gauge connections with plug complete of seal.
-

Technical characteristics

Connections	G 1"
Max working pressure (bar)	13 bar - 1,3 MPa
Temperature °C	50°C
Pressure gauge connections	G 1/8"
Weight	gr. 1638
Assembly position	Any
Wall fixing screw	M8

3

Lubricator

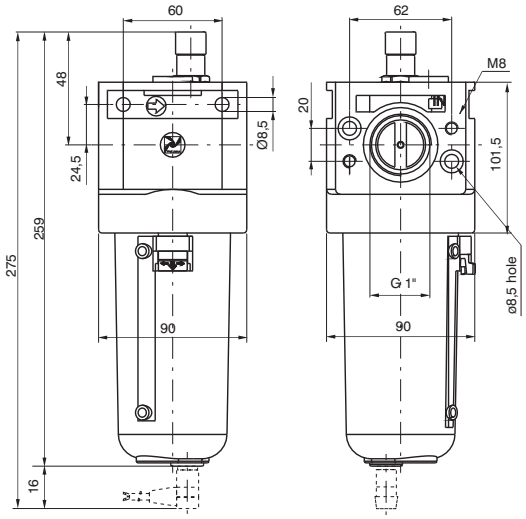

Ordering code

17403B.Ⓣ

Ⓣ	TYPE
	MA = Min. oil level indicator N.O. with plug connector
	MC = Min. oil level indicator N.C. with plug connector

Example: 17403B
Lubricator size 4 with G 1" connections.
Note: on the MA version the contact is open when oil is present; on the MC version the contact is closed when oil is present

Flow rate curves

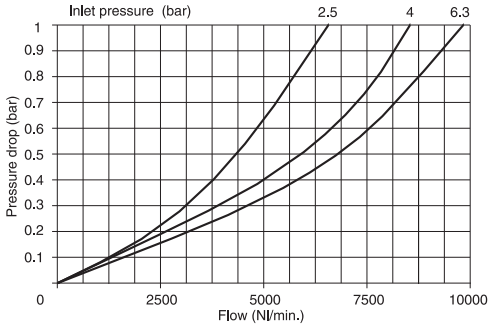

Operating Characteristics

- Fog type lubrication with variable section orifice according to the flow.
- Body made with light alloy.
- Wall mounting possibility with M8 screws protected by covers.
- Light alloy bowl c/w level indicator connected to the body with bayonet cap and safety button.
- Transparent technopolymer sight dome with adjusting handle.
- Oil filling plug.
- Electrical connector for low level indication. Use the C1, C2 or C3 lead for connection (see section 6 "Sensor").

Technical characteristics

Connections	G 1"
Max working pressure (bar)	13 bar - 1,3 MPa
Temperature °C	50°C
Weight	gr. 1500
Indicative oil drip rate	1 drop every 300/600 Nl
Oil type	FD22 - HG32
Bowl capacity	300 cm³
Assembly position	Vertical
Wall fixing screw	M8
Min. operational flow at 6,3 bar	100 Nl/min

Progressive start-up valve

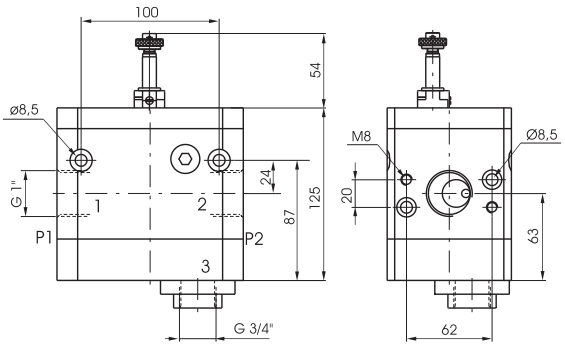

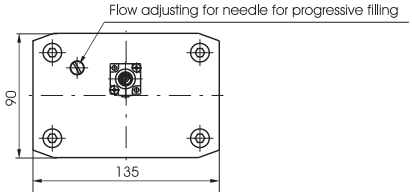

Ordering code

174Ⓣ

Ⓣ	TYPE
	10.M2 = Electric control complete wih M2 mechanic (see page 2.13)
	20 = with pneumatic control

Operating Characteristics

- 3 way valve with double poppet.
- Possibility to adjust the down stream circuit filling time by the enclosed adjustable metering screw.
- Quick down stream circuit discharge.
- Possibility for a pneumatic or electric piloting control.
- Body made with anodized 2011 aluminum alloy.
- Wall mounting possibility with M8 screws.

Technical characteristics

Connections	G 1"
Max working pressure (bar)	10 bar - 1 MPa
Temperature °C	50°C
Weight	gr. 2300
Assembly position	Any
Wall fixing screw	M8
Min. working pressure	2,5 bar - 0,25 MPa
Nominal flow at 6 bar with Δp=1	8000 Nl/min.
Flow with adjustable metering screw fully open	3000 Nl/min.

Shut-off valve

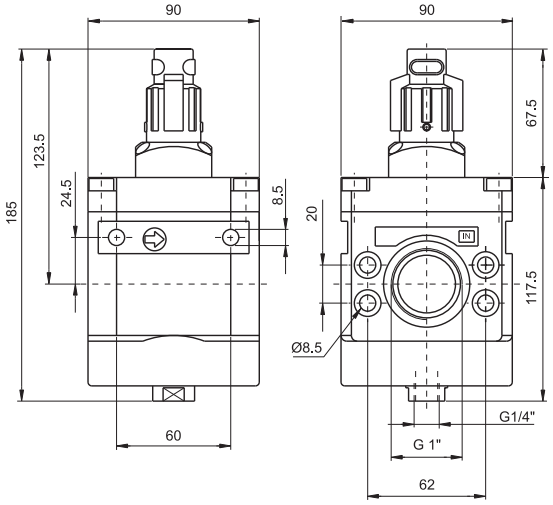

Ordering code

17430.Ⓣ

Ⓣ	TYPE
	A = Not lockable handle
	B = Lockable handle

Example: 17430.B
Shut-off valve size 4 complete with lockable handle.
Important note: the preventive or programmed maintenance of this product is not foreseen considering the elaborated assembling and the specific PNEUMAX testing; therefore, call the producer or its representative in case of necessity.

Operating Characteristics

- 3 ways poppet valve.
- Body made with light alloy.
- Wall mounting possibility with M8 screws protected by covers.
- Double action handle for valve opening: pushing and rotating (clockwise).
- Simple rotate the valve handle counter clockwise for valve closing and down stream circuit discharging.
- Possibility to lock the valve in the discharging position by fitting in a padlock in the proper seat.

Technical characteristics

Connections	G 1"
Max working pressure (bar)	10 bar - 1 MPa
Temperature °C	50°C
Weight	gr. 1600
Assembly position	Any
Nominal flow at 6 bar with Δp=1	8000 Nl/min.
Wall fixing screw	M8
Handle opening and closing angle	90°

Filter + Pressure regulator + Lubricator

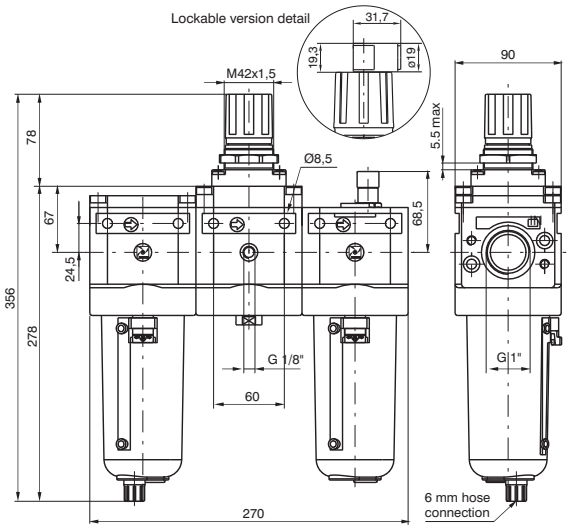

Ordering code

17407NB.Ⓢ.Ⓖ.Ⓣ.Ⓞ

Ⓢ	FILTER PORE SIZE
	A = 5μ
	B = 20μ
	C = 50μ
Ⓖ	ADJUSTING RANGE
	A = 0 - 2 bar
	B = 0 - 4 bar
	C = 0 - 8 bar
	D = 0 - 12 bar
Ⓣ	TYPE
	S = Automatic drain
Ⓞ	OPTION
	*Standard
	K = Lockable version

* No additional letters required

Operating Characteristics

- Filter - diaphragm pressure regulator with relieving with balanced poppet.
- Double filtering action: by air centrifuging and by replaceable and reusable HDPE porous filter element.
- Body made with light alloy.
- Wall mounting possibility with M8 screws protected by covers.
- Pressure adjusting lockable handle by simply pressing it downwards in the desired position
- Light alloy bowl c/w level indicator connected to the body with bayonet cap and safety button.
- Manual and semi-automatic water drain valve; in the semi-automatic version the drainage happens when there is no pressure or by pushing the valve up-wards.
- Automatic water drainage bowl available on request.
- Two pressure gauge connections with plug complete of seal.
- Fog type lubrication with variable section orifice according to the flow.
- Transparent technopolymer sight dome with adjusting handle.
- Oil filling plug.

Technical characteristics

Connections	G 1"
Max working pressure (bar)	13 bar - 1,3 MPa
Temperature °C	50°C
Pressure gauge connections	G 1/8"
Weight	gr. 5300
Pressure range (bar)	0 - 2 / 0 - 4 / 0 - 8 / 0 - 12
Filter pore size	5μ - 20μ - 50μ
Bowl capacity	178 cm³
Indicative oil drip rate	1 drop every 300/600 Nl
Oil type	FD22 - HG32
Bowl capacity	300 cm³
Assembly position	Vertical
Wall fixing screw	M8
Min. operational flow at 6,3 bar	100 Nl/min

Pressure Switch complete with adapter

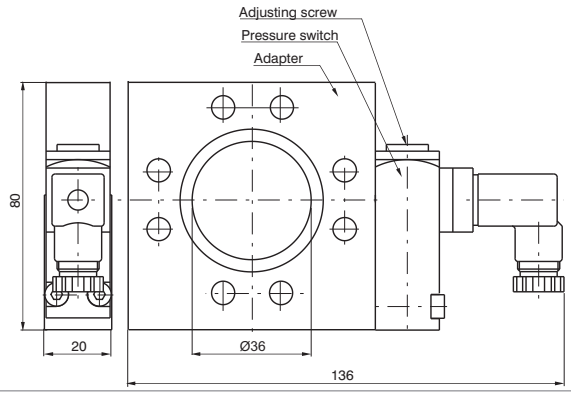

Ordering code

17Ⓣ

Ⓣ	TYPE
	44A = Pressure switch adapter
	14B = Pressure switch
	44C = Pressure switch complete with adapter

Example: 1744C
Pressure switch complete with adapter.

Connection

1 = Neutral
2 = N.C contact
3 = N.O contact

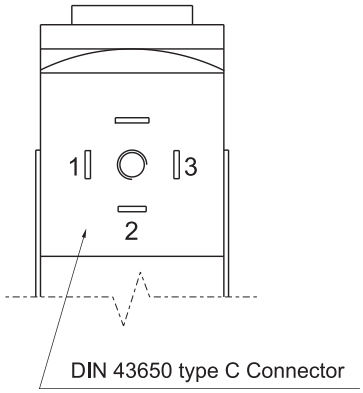

Operating Characteristics

- The pressure switch complete of adapter has to be assembled between two elements of the FRL group.
- It cannot be utilized separately or at the end of the FRL group.
- The pressure switch can be set at desired pressure (Pressure range (bar) from 2 to 10 bar) by rotating the adjusting screw.
- The electrical connection is made by mean of a 15 mm connector DIN 43650 type C.
- The microswitch contact could be Normally Closed or open (change over switch).

Technical characteristics

Max working pressure (bar)	13 bar - 1,3 MPa
Temperature °C	50°C
Weight	gr. 450
Microswitch capacity	1A
Microswitch Maximum voltage	250 VAC
Grade of protection (with connector assembled)	IP 65
Pressure range (bar)	2 - 10 bar
Assembly position	Any

Air Intake

Ordering code

17440

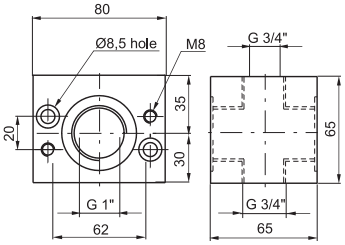

Pressure gauge

Ordering code

17070Ⓥ.Ⓢ

Ⓥ	VERSION
	A = Dial ø40
	B = Dial ø50
Ⓢ	SCALE
	A = Scale 0-4 bar
	B = Scale 0-6 bar
	C = Scale 0-12 bar

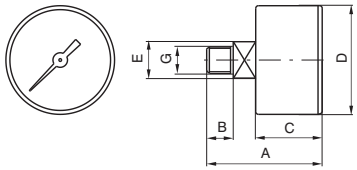

DIMENSIONS

CODE	A	B	C	D	E	G	Weight gr.
17070A	44	10	26	41	14	1/8"	60
17070B	45	10	27	49	14	1/8"	80

3

Manometer diameter D. 23

Ordering code	
17070M.Ⓢ	
Ⓢ	SCALE
	A = Scale 0-4 bar
	B = Scale 0-6 bar
	C = Scale 0-12 bar

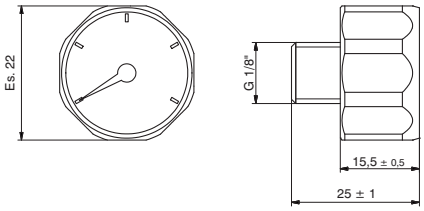

Assembling kit

Ordering code	
1746Ⓥ	
Ⓥ	VERSION
	0 = Standard
	5 = for progressive start-up valve

3