## Foot Mounting Type 1309 ☐ 05/1F (MS1 Mounting Style)

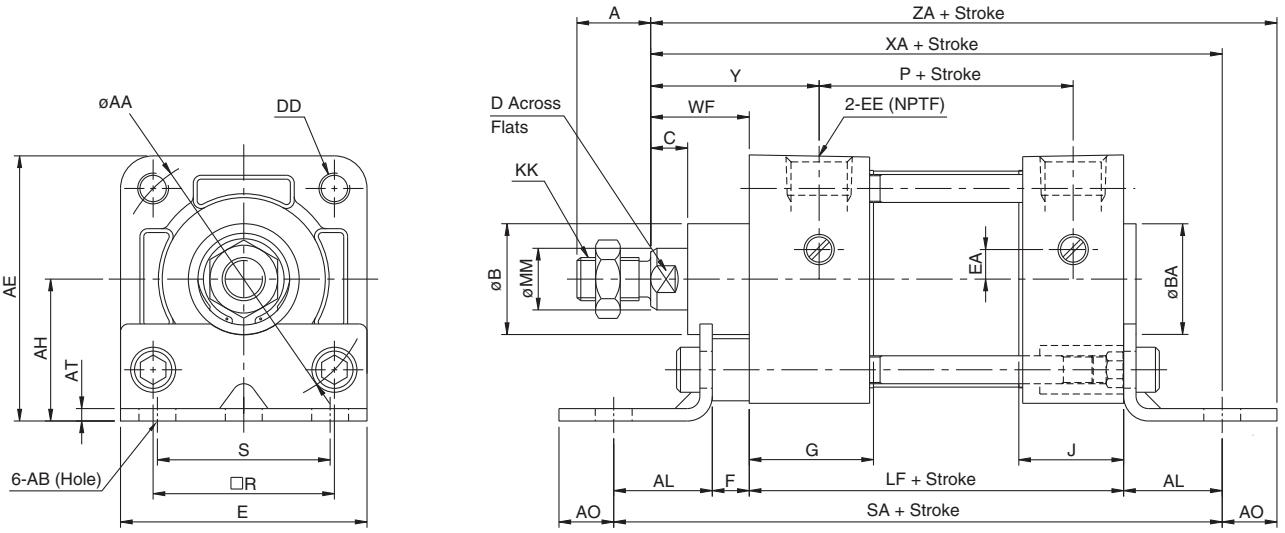


(in)

| Bore (in) | MM | KK | A | AA | AB | AE | AH | AL | AO | AT | B | BA | C | D | DD | E | EA | EE | F | G | J | R | S | WF | Y | P | LF | SA | XA | ZA |
|---|---|---|---|---|---|---|---|---|---|---|---|---|---|---|---|---|---|---|---|---|---|---|---|---|---|---|---|---|---|---|
| 150 (1.5") | 5/8 | 7/16-20 | 3/4 | 2.02 | 3/8 | 2 3/16 | 1 3/16 | 1 | 7/16 | 1/8 | 1 1/8 | 1 1/8 | 3/8 | 9/16 | 1/4-28 | 2 | 0.3 | 3/8 | 3/8 | 1.26 | 1.1 | 1.43 | 1 1/4 | 1 | 1.71 | 2.36 | 3 5/8 | 6 | 5 5/8 | 6 1/16 |
| 200 (2") | 5/8 | 7/16-20 | 3/4 | 2.6 | 3/8 | 2 11/16 | 1 7/16 | 1 | 9/16 | 1/8 | 1 1/8 | 1 1/8 | 3/8 | 9/16 | 5/16-24 | 2 1/2 | 0.3 | 3/8 | 3/8 | 1.26 | 1.06 | 1.84 | 1 3/4 | 1 | 1.71 | 2.4 | 3 5/8 | 6 | 5 5/8 | 6 3/16 |
| 250 (2.5") | 5/8 | 7/16-20 | 3/4 | 3.1 | 3/8 | 3 1/8 | 1 5/8 | 1 | 9/16 | 1/8 | 1 1/8 | 1 1/8 | 3/8 | 9/16 | 5/16-24 | 3 | 0 | 3/8 | 3/8 | 1.3 | 1.06 | 2.19 | 2 1/4 | 1 | 1.75 | 2.48 | 3 3/4 | 6 1/8 | 5 3/4 | 6 5/16 |
| 325 (3.25") | 1 | 3/4-16 | 1 1/8 | 3.9 | 1/2 | 3 13/16 | 1 15/16 | 1 1/4 | 3/4 | 11/64 | 1 1/2 | 1 1/2 | 1/2 | 7/8 | 3/8-24 | 3 3/4 | 0 | 1/2 | 5/8 | 1.57 | 1.18 | 2.76 | 2 3/4 | 1 3/8 | 2.34 | 2.72 | 4 1/4 | 7 3/8 | 6 7/8 | 7 5/8 |
| 400 (4") | 1 | 3/4-16 | 1 1/8 | 4.7 | 1/2 | 4 1/2 | 2 1/4 | 1 1/4 | 3/4 | 15/64 | 1 1/2 | 1 1/2 | 1/2 | 7/8 | 3/8-24 | 4 1/2 | 0 | 1/2 | 5/8 | 1.57 | 1.18 | 3.32 | 3 1/2 | 1 3/8 | 2.34 | 2.72 | 41/4 | 7 3/8 | 6 7/8 | 7 5/8 |

## Flange Mounting Type 1309 ☐ 03F (MF1 Mounting Style)

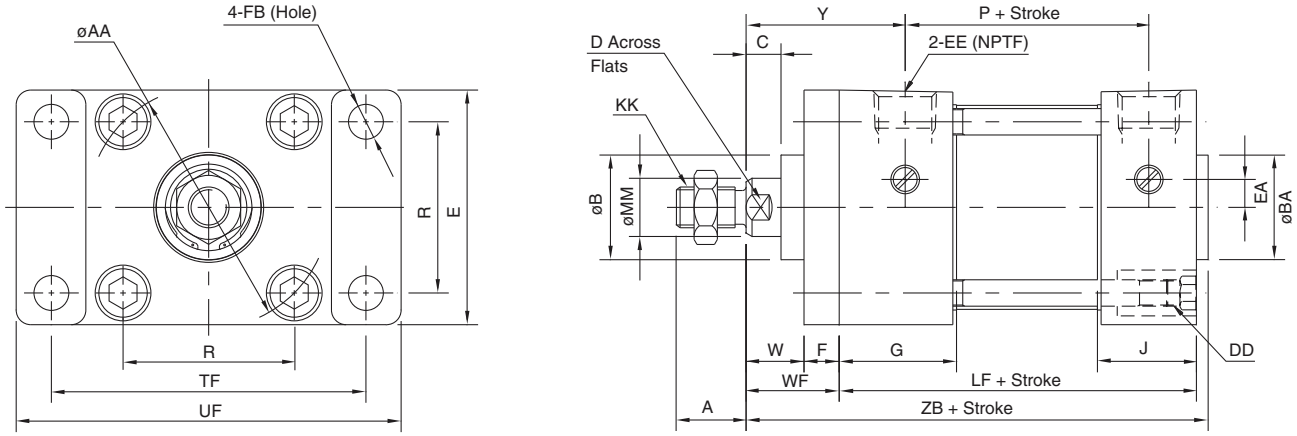


(in)

| Bore (in) | MM | KK | A | AA | B | BA | C | D | DD | E | EA | EE | F | FB | G | J | R | TF | UF | W | WF | Y | LF | P | ZB |
|---|---|---|---|---|---|---|---|---|---|---|---|---|---|---|---|---|---|---|---|---|---|---|---|---|---|
| 150 (1.5") | 5/8 | 7/16-20 | 3/4 | 2.02 | 1 1/8 | 1 1/8 | 3/8 | 9/16 | 1/4-28 | 2 | 0.3 | 3/8 | 3/8 | 5/16 | 1.26 | 1.1 | 1.43 | 2 3/4 | 3 3/8 | 5/8 | 1 | 1.71 | 3 5/8 | 2.36 | 4 3/4 |
| 200 (2") | 5/8 | 7/16-20 | 3/4 | 2.6 | 1 1/8 | 1 1/8 | 3/8 | 9/16 | 5/16-24 | 2 1/2 | 0.3 | 3/8 | 3/8 | 3/8 | 1.26 | 1.06 | 1.84 | 3 3/8 | 4 1/8 | 5/8 | 1 | 1.71 | 3 5/8 | 2.4 | 4 3/4 |
| 250 (2.5") | 5/8 | 7/16-20 | 3/4 | 3.1 | 1 1/8 | 1 1/8 | 3/8 | 9/16 | 5/16-24 | 3 | 0 | 3/8 | 3/8 | 3/8 | 1.3 | 1.06 | 2.19 | 3 7/8 | 4 5/8 | 5/8 | 1 | 1.75 | 3 3/4 | 2.48 | 4 7/8 |
| 325 (3.25") | 1 | 3/4-16 | 1 1/8 | 3.9 | 1 1/2 | 1 1/2 | 1/2 | 7/8 | 3/8-24 | 3 3/4 | 0 | 1/2 | 5/8 | 7/16 | 1.57 | 1.18 | 2.76 | 4 11/16 | 5 1/2 | 3/4 | 1 3/8 | 2.34 | 4 1/4 | 2.72 | 5 53/64 |
| 400 (4") | 1 | 3/4-16 | 1 1/8 | 4.7 | 1 1/2 | 1 1/2 | 1/2 | 7/8 | 3/8-24 | 4 1/2 | 0 | 1/2 | 5/8 | 7/16 | 1.57 | 1.18 | 3.32 | 5 7/16 | 6 1/4 | 3/4 | 1 3/8 | 2.34 | 4 1/4 | 2.72 | 5 53/64 |

## Flange Mounting Type 1309 □03F (MF2 Mounting Style)

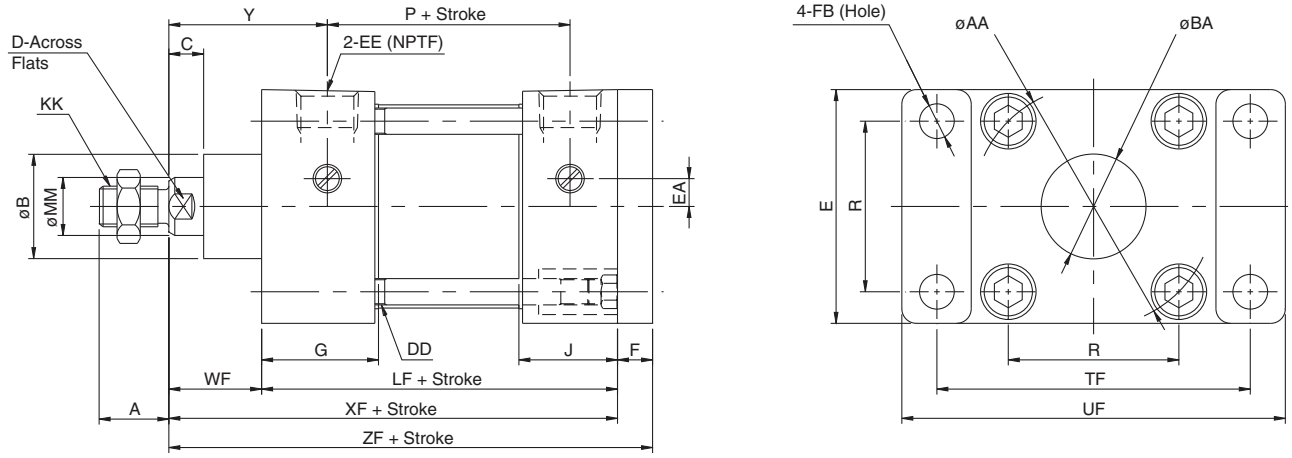


(in)

| Bore (in) | MM | KK | A | AA | B | BA | C | D | DD | E | EA | EE | F | FB | G | J | R | TF | UF | WF | Y | P | XF | ZF |
|---|---|---|---|---|---|---|---|---|---|---|---|---|---|---|---|---|---|---|---|---|---|---|---|---|
| 150 (1.5") | 5/8 | 7/16-20 | 3/4 | 2.02 | 1 1/8 | 1 1/8 | 3/8 | 9/16 | 1/4-28 | 2 | 0.3 | 3/8 | 3/8 | 5/16 | 1.26 | 1.1 | 1.43 | 2 3/4 | 3 3/8 | 1 | 1.71 | 2.36 | 4 5/8 | 5 |
| 200 (2") | 5/8 | 7/16-20 | 3/4 | 2.6 | 1 1/8 | 1 1/8 | 3/8 | 9/16 | 5/16-24 | 2 1/2 | 0.3 | 3/8 | 3/8 | 3/8 | 1.26 | 1.06 | 1.84 | 3 3/8 | 4 1/8 | 1 | 1.71 | 2.4 | 4 5/8 | 5 |
| 250 (2.5") | 5/8 | 7/16-20 | 3/4 | 3.1 | 1 1/8 | 1 1/8 | 3/8 | 9/16 | 5/16-24 | 3 | 0 | 3/8 | 3/8 | 3/8 | 1.3 | 1.06 | 2.19 | 3 7/8 | 4 5/8 | 1 | 1.75 | 2.48 | 4 3/4 | 5 1/8 |
| 325 (3.25") | 1 | 3/4-16 | 1 1/8 | 3.9 | 1 1/2 | 1 1/2 | 1/2 | 7/8 | 3/8-24 | 3 3/4 | 0 | 1/2 | 5/8 | 7/16 | 1.57 | 1.18 | 2.76 | 4 11/16 | 5 1/2 | 1 3/8 | 2.34 | 2.72 | 5 5/8 | 6 1/4 |
| 400 (4") | 1 | 3/4-16 | 1 1/8 | 4.7 | 1 1/2 | 1 1/2 | 1/2 | 7/8 | 3/8-24 | 4 1/2 | 0 | 1/2 | 5/8 | 7/16 | 1.57 | 1.18 | 3.32 | 5 7/16 | 6 1/4 | 1 3/8 | 2.34 | 2.72 | 5 5/8 | 6 1/4 |

## Single Detachable Rear Clevis Mounting Type 1309 □ 09/1F (MP4 Mounting Style)

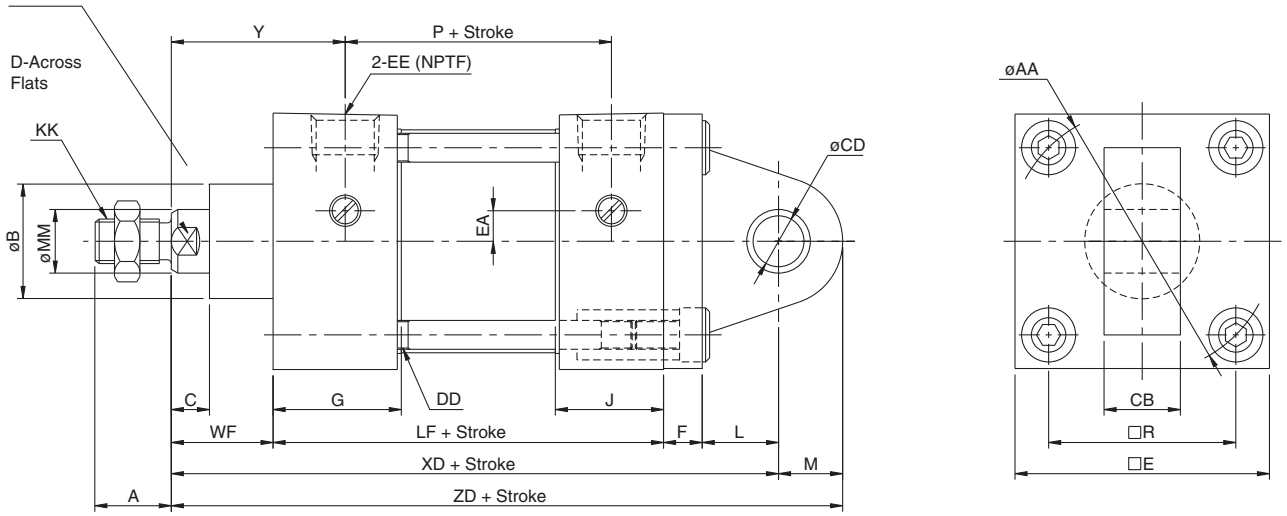


| Bore (in) | MM | KK | A | AA | B | C | CB | CD | D | DD | E | EA | EE | F | G | J | L | M | R | WF | XD | Y | LF | P | ZD |
|---|---|---|---|---|---|---|---|---|---|---|---|---|---|---|---|---|---|---|---|---|---|---|---|---|---|
| 150 (1.5") | 5/8 | 7/16-20 | 3/4 | 2.02 | 1 1/8 | 3/8 | 3/4 | 1/2 | 9/16 | 1/4-28 | 2 | 0.3 | 3/8 | 3/8 | 1.26 | 1.1 | 3/4 | 0.63 | 1.43 | 1 | 5 3/4 | 1.71 | 3 5/8 | 2.36 | 6 3/8 |
| 200 (2") | 5/8 | 7/16-20 | 3/4 | 2.6 | 1 1/8 | 3/8 | 3/4 | 1/2 | 9/16 | 5/16-24 | 2 1/2 | 0.3 | 3/8 | 3/8 | 1.26 | 1.06 | 3/4 | 0.63 | 1.84 | 1 | 5 3/4 | 1.71 | 3 5/8 | 2.4 | 6 3/8 |
| 250 (2.5") | 5/8 | 7/16-20 | 3/4 | 3.1 | 1 1/8 | 3/8 | 3/4 | 1/2 | 9/16 | 5/16-24 | 3 | 0 | 3/8 | 3/8 | 1.3 | 1.06 | 3/4 | 0.63 | 2.19 | 1 | 5 7/8 | 1.75 | 3 3/4 | 2.48 | 6 1/2 |
| 325 (3.25") | 1 | 3/4-16 | 1 1/8 | 3.9 | 1 1/2 | 1/2 | 1 1/4 | 3/4 | 7/8 | 3/8-24 | 3 3/4 | 0 | 1/2 | 5/8 | 1.57 | 1.18 | 1 1/4 | 0.87 | 2.76 | 1 3/8 | 7 1/2 | 2.34 | 4 1/4 | 2.72 | 8 3/8 |
| 400 (4") | 1 | 3/4-16 | 1 1/8 | 4.7 | 1 1/2 | 1/2 | 1 1/4 | 3/4 | 7/8 | 3/8-24 | 4 1/2 | 0 | 1/2 | 5/8 | 1.57 | 1.18 | 1 1/4 | 0.87 | 3.32 | 1 3/8 | 7 1/2 | 2.34 | 4 1/4 | 2.72 | 8 3/8 |

## Double Detachable Rear Clevis Mounting Type 1309□ 09F (MP2 Mounting Style)

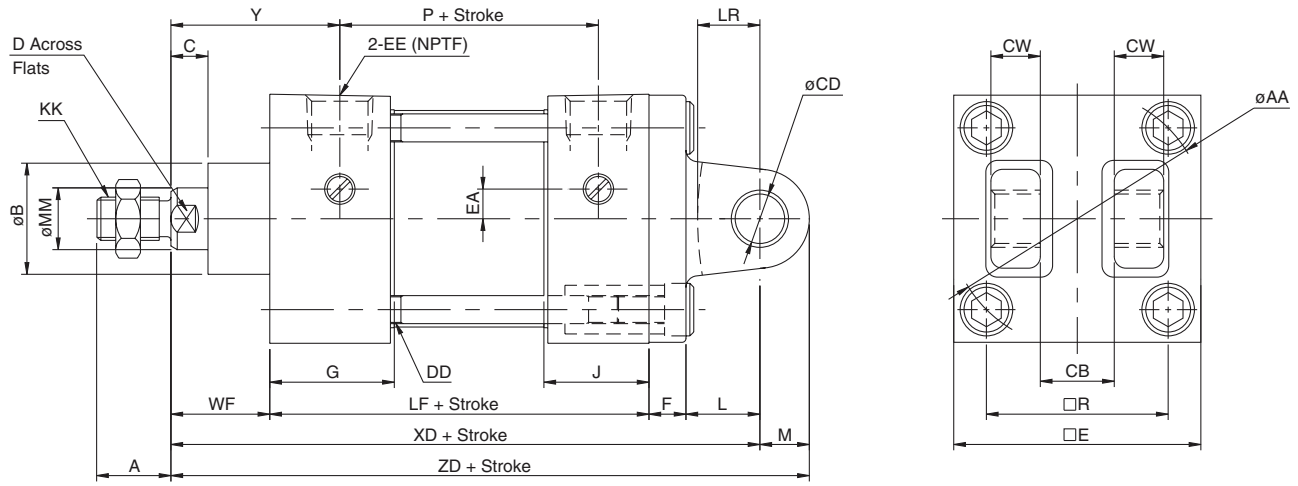


(in)

| Bore (in) | MM | KK | A | AA | B | C | CB | CD | CW | D | DD | E | EA | EE | F | G | J | L | LR | M | R | WF | XD | Y | LF | P | ZD |
|---|---|---|---|---|---|---|---|---|---|---|---|---|---|---|---|---|---|---|---|---|---|---|---|---|---|---|---|
| 150 (1.5") | 5/8 | 7/16-20 | 3/4 | 2.02 | 1 1/8 | 3/8 | 3/4 | 1/2 | 1/2 | 9/16 | 1/4-28 | 2 | 0.3 | 3/8 | 3/8 | 1.26 | 1.1 | 3/4 | 5/8 | 1/2 | 1.43 | 1 | 5 3/4 | 1.71 | 3 5/8 | 2.36 | 6 1/4 |
| 200 (2") | 5/8 | 7/16-20 | 3/4 | 2.6 | 1 1/8 | 3/8 | 3/4 | 1/2 | 1/2 | 9/16 | 5/16-24 | 2 1/2 | 0.3 | 3/8 | 3/8 | 1.26 | 1.06 | 3/4 | 5/8 | 1/2 | 1.84 | 1 | 5 3/4 | 1.71 | 3 5/8 | 2.4 | 6 1/4 |
| 250 (2.5") | 5/8 | 7/16-20 | 3/4 | 3.1 | 1 1/8 | 3/8 | 3/4 | 1/2 | 1/2 | 9/16 | 5/16-24 | 3 | 0 | 3/8 | 3/8 | 1.3 | 1.06 | 3/4 | 5/8 | 1/2 | 2.19 | 1 | 5 7/8 | 1.75 | 3 3/4 | 2.48 | 6 3/8 |
| 325 (3.25") | 1 | 3/4-16 | 1 1/8 | 3.9 | 1 1/2 | 1/2 | 1 1/4 | 3/4 | 5/8 | 7/8 | 3/8-24 | 3 3/4 | 0 | 1/2 | 5/8 | 1.57 | 1.18 | 1 1/4 | 1 | 3/4 | 2.76 | 1 3/8 | 7 1/2 | 2.34 | 4 1/4 | 2.72 | 8 1/4 |
| 400 (4") | 1 | 3/4-16 | 1 1/8 | 4.7 | 1 1/2 | 1/2 | 1 1/4 | 3/4 | 5/8 | 7/8 | 3/8-24 | 4 1/2 | 0 | 1/2 | 5/8 | 1.57 | 1.18 | 1 1/4 | 1 | 3/4 | 3.32 | 1 3/8 | 7 1/2 | 2.34 | 4 1/4 | 2.72 | 8 1/4 |

## Double Rear Clevis Mounting Type 1309□ 09F-MP1 (MP1 Mounting Style)

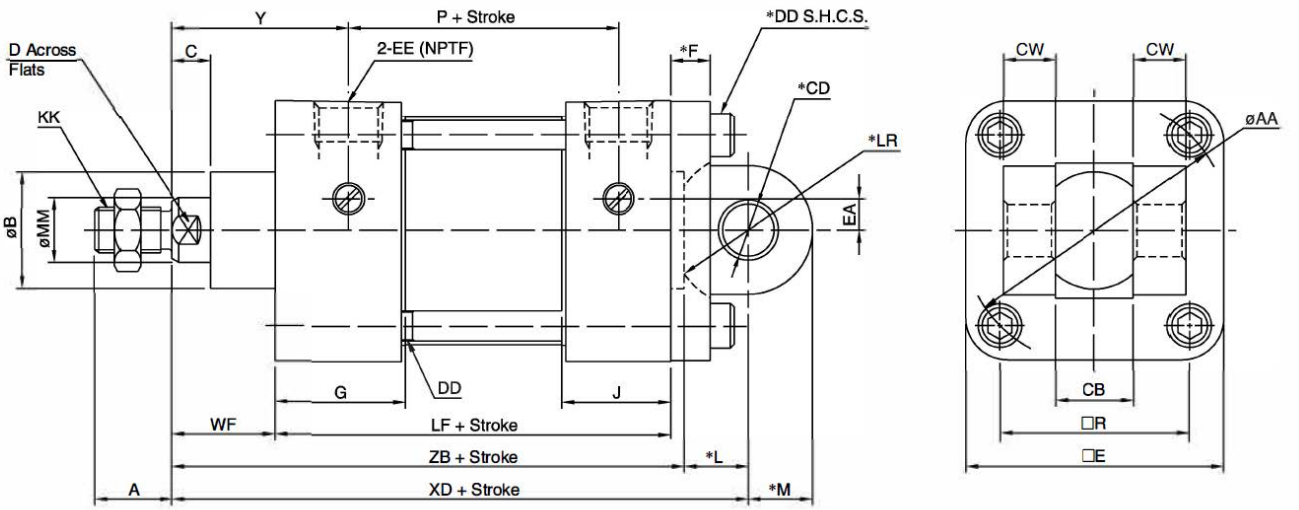


(in)

| Bore (in) | MM | KK | A | AA | B | C | CB | CD | CW | D | DD | E | EA | EE | F | G | J | L | LR | R | M | WF | XD | Y | LF | P | ZB |
|---|---|---|---|---|---|---|---|---|---|---|---|---|---|---|---|---|---|---|---|---|---|---|---|---|---|---|---|
| 150 (1.5") | 5/8 | 7/16-20 | 3/4 | 2.02 | 1 1/8 | 3/8 | 3/4 | 1/2 | 1/2 | 9/16 | 1/4-28 | 2 | 0.3 | 3/8 | 3/8 | 1.26 | 1.1 | 0.62 | 0.75 | 1.43 | 0.62 | 1 | 5 3/8 | 1.71 | 3 5/8 | 2.36 | 4.75 |
| 200 (2") | 5/8 | 7/16-20 | 3/4 | 2.6 | 1 1/8 | 3/8 | 3/4 | 1/2 | 1/2 | 9/16 | 5/16-24 | 2 1/2 | 0.3 | 3/8 | 3/8 | 1.26 | 1.06 | 0.62 | 0.75 | 1.84 | 0.62 | 1 | 5 3/8 | 1.71 | 3 5/8 | 2.4 | 4.75 |
| 250 (2.5") | 5/8 | 7/16-20 | 3/4 | 3.1 | 1 1/8 | 3/8 | 3/4 | 1/2 | 1/2 | 9/16 | 5/16-24 | 3 | 0 | 3/8 | 3/8 | 1.3 | 1.06 | 0.62 | 0.75 | 2.19 | 0.62 | 1 | 5 1/2 | 1.75 | 3 3/4 | 2.48 | 4.88 |
| 325 (3.25") | 1 | 3/4-16 | 1 1/8 | 3.9 | 1 1/2 | 1/2 | 1 1/4 | 3/4 | 5/8 | 7/8 | 3/8-24 | 3 3/4 | 0 | 1/2 | 5/8 | 1.57 | 1.18 | 1.05 | 1.25 | 2.76 | 0.87 | 1 3/8 | 6 7/8 | 2.34 | 4 1/4 | 2.72 | 5.83 |
| 400 (4") | 1 | 3/4-16 | 1 1/8 | 4.7 | 1 1/2 | 1/2 | 1 1/4 | 3/4 | 5/8 | 7/8 | 3/8-24 | 4 1/2 | 0 | 1/2 | 5/8 | 1.57 | 1.18 | 1.05 | 1.25 | 3.32 | 0.87 | 1 3/8 | 6 7/8 | 2.34 | 4 1/4 | 2.72 | 5.83 |

## Rod Clevises
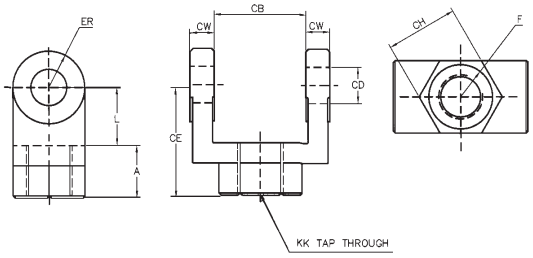
| Part No | CB | CD | CE | CH | CW | F | L | A | KK | ER |
|---|---|---|---|---|---|---|---|---|---|---|
| 1309.150.13F | 0.765 | 0.5 | 1 1/2 | 1 | 1/2 | 1 | 3/4 | 3/4 | 7/16-20 | 1/2 |
| 1309.325.13F | 1.265 | 0.75 | 2 3/8 | 1 3/8 | 5/8 | 1 1/4 | 1 1/4 | 1 1/8 | 3/4-16 | 3/4 |