4REV.

PNEUMAX

FOR AUTOMOTIVE

INNOVATION DOWN TO THE LAST DETAIL

PNEUMAX®

PNEUMAX

FOR AUTOMOTIVE

The ULTIMATE CLAMPING TECHNOLOGY.

Innovation begins with Research and Development and extends to industrial processes and business activities, with the ultimate aim of total customer satisfaction.

INNOVATION DOWN TO THE LAST DETAIL

WHY PNX

TABLE OF CONTENTS

4 **WHY PNX**
6 40th year
8 The company in numbers
10 Product Development
12 Worldwide presence
13 Customer-oriented global service
14 High product availability
15 Warranty
16 Quality under each aspect
17 One source supplier

24 **CLAMPING**
25 C-series
34 Nano Power Clamps
47 C1M series
86 C_X series
94 K-series
126 HE-series
156 Sealed clamps

158 **LOCATING**
159 R-series
164 RP-series and RA-series
188 RC-series
201 HP-series
208 F-series

216 **HANDLING**
217 J-series
223 JK-series

228 **PIVOTING**
229 P-series

238 **ACCESSORIES**
239 Shims
241 Spacers
242 Sensors
247 Sensor cables
248 Auto-retaining devices
255 Special design products
257 Ecolight cylinders with rodscrapers
259 Special arm types

264 Clamps at work!

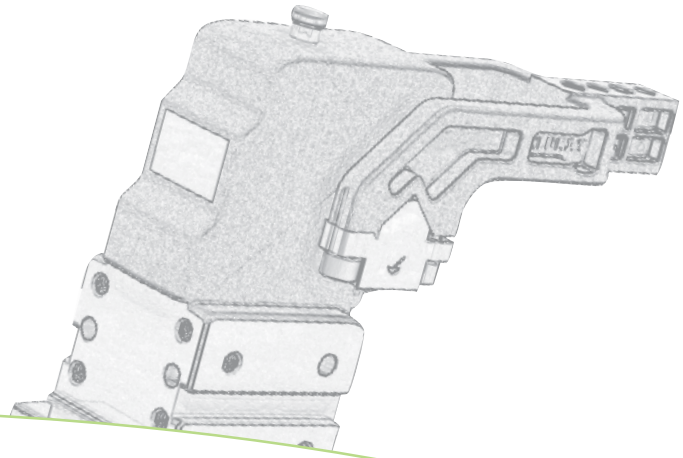

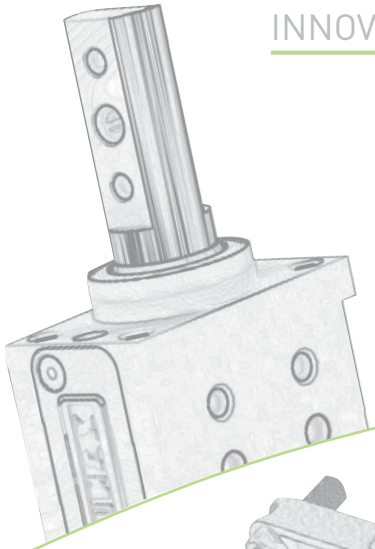

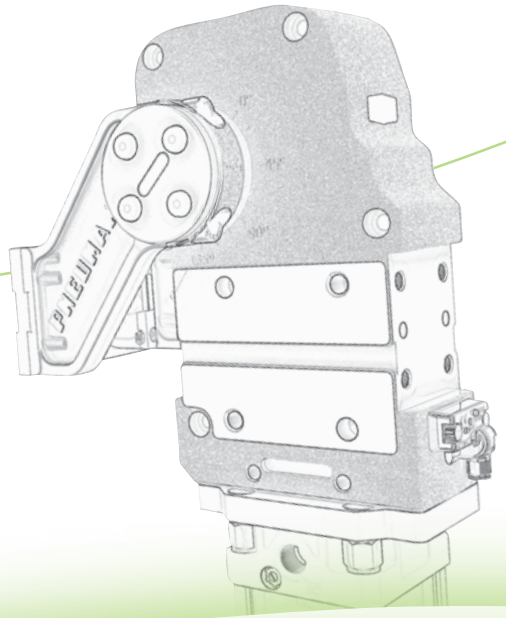

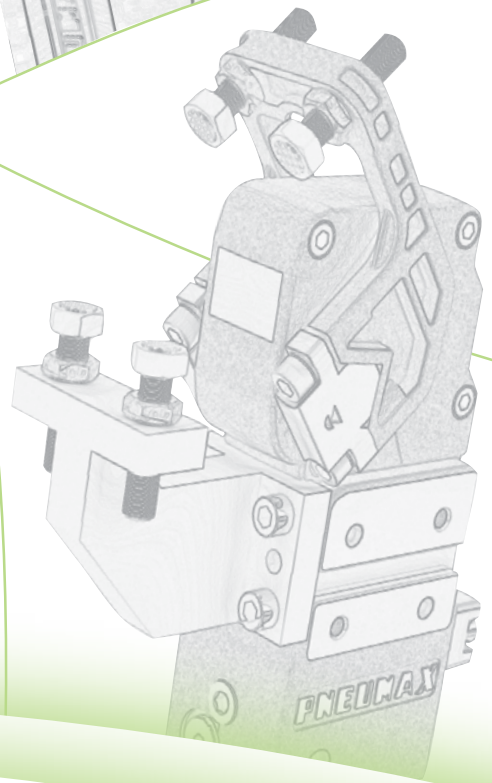

Extensive Product Range covering **Clamping**, **Locating**, **Handling**, **Pivoting** functions, with all options required in the **BIW** production lines.

Our clamping series features the widest range in clamping moment & stepless adjustable opening in the industry.

LOCATING

- RP50
- RP32
- RP63
- RA32
- RC50 CNOMO
- HP50
- RC63 CNOMO
- FP40
- RD50
- FP63

HANDLING

- JP40
- JKP40
- JD40
- JKD40

PIVOTING

- P80
- P100
- P125

ACCESSORIES

- Shims
- Auto-retaining devices
- Spacers
- Special arm types
- Sensors
- Sensor cables

COMPLEMENTARY PRODUCTS

- Ecolight Cylinders

WHY PNX

40TH YEAR

1976

2016

WHY PNX

THE COMPANY IN NUMBERS

13
INTERNATIONAL SUBSIDIARIES

7
NATIONAL SUBSIDIARIES

PLUS 500+
SPECIAL PRODUCTS MANUFACTURED YEARLY

43
COUNTRIES WITH A PNEUMAX APPROVED DEALER

3
PRODUCTION COMPANIES

600
THINKING HEADS WORLDWIDE

100,000
m² MANUFACTURING LOCATION

MADE IN ITALY

ISO 14100:2004
ISO 9001:2008
ISO 18001:2007

5 BRANCHES

- PNEUMATIC AUTOMATION
- AUTOMOTIVE
- Oil&Gas PNEUMAX
- XCUUM TECNOLOGY
- LINEAR ACTUATORS

WHY PNX

PRODUCT DEVELOPMENT

Our steps towards the highest level of efficiency and superior quality

1 PRODUCT CONCEPT

Market requirement evaluation and product specs definition by product management. The project team analyzes the technical feasibility and sets a general timeline.

2 PROTOTYPING

After a **structural mechanics simulation analysis**, the R&D team prepares a CAD model which is used with a **3 axis printing-moulding machine** to manufacture the first prototypal batches. A first evaluation of the product concentrates on the functional and dimensional requirements.

3 ELECTRONICS INTEGRATION

Electronic components are developed and manufactured **in-house** by Pneumax to be integrated in any system or as interface to any protocol.

4 FMEA

The first close-to-series samples are machined, using the **latest generation machinery**.
The first **FMEA** is prepared.

5 EVALUATION AND INSPECTION

Life test and approval. The products are subjected to **functional**, **performance**, **temperature tests** for millions of cycles.

6 ENGINEERING

The engineering department evaluates and adopts the most suitable manufacturing technology and assembly procedure to implement, using **3D simulation programs**.

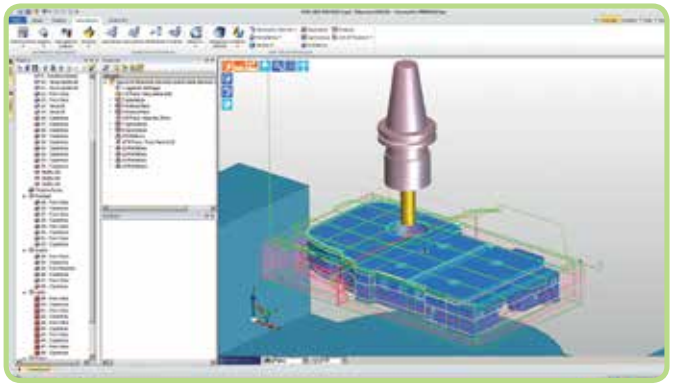

7 PRODUCT INDUSTRIALIZATION

The industrialization team together with the technical department develop any specific equipment and tool required. Suppliers' evaluation is accomplished.

8 PILOT SERIES RELEASE AND PRODUCT AUDIT

Verication and validation that the product meets the requirements.

WHY PNX

WORLDWIDE PRESENCE

Distribution network through

13 international subsidiaries

7 national subsidiaries

43 approved dealers

Europe
- Czech Republic
- France
- Germany
- Poland
- Portugal
- Russia
- Spain
- Spain (Catalunia)
- Sweden
- United Kingdom

Asia
- China
- India
- Singapore

South America
- Brasil

For a complete list of our distributors and contacts, please visit our website www.pneumaxspa.com or contact our sales representatives at info@pneumaxspa.com

CUSTOMER-ORIENTED GLOBAL SERVICE

Pneumax guarantees quick component availability and prompt service, as well as technical and application support worldwide.

Pneumax offers continuous engineering support, from suggesting the best solution to the customers' applications based on the latest technological standards, to sizing the components and systems and to providing comprehensive documentation, 3D and components layout.

WHY PNX

HIGH PRODUCT AVAILABILITY

Pneumax, with its commitment to continuous improvement, is equipped with the **latest generation machinery with fast set up times**, to achieve high productivity and to guarantee a **quick and high delivery capability**. Most of the goods from our core product lines are dispatched **from our shelves**.

Our production maching dept., at the forefront in manufacturing, is online synchronized with our planning dept. to allow the fastest possible goods work flow from order receipt to dispatch from our shelves.

FLEXIBLE VERSATILE VERSATILE VERSATILE ADAPTIVE

to new requirements at short notice.

WARRANTY

- ✔ NO BACKLASHES
- ✔ NO WEAR
- ✔ CONSTANT FUNCTIONAL PARAMETERS, PERFORMANCE LEVEL AND REPEATABILITY OVER TIME

QUALITY UNDER EACH ASPECT

Pneumax has proven its commitment to quality of:

- ✔ **PRODUCT** through automated inspection processes at each step of the manufacturing
- ✔ **MANUFACTURING** through regular tooling and machinery inspection and calibration
- ✔ **PRODUCT RANGE** through continuous R&D activities
- ✔ **PROCESS** through regular internal quality audits
- ✔ **LOGISTICS** through a regular monitoring of lead time, completeness, flexibility and productivity
- ✔ **AFTER SALES** through quick and professional technical support, and effective reaction time for the supply of the spare parts

Certificate

Pneumax S.p.A.
Via Cascina Barbellina, 10
24050 Lurano (BG)
Italy

Whole Company
incl. production unit Supermeccanica S.r.l

Components for pneumatic automation

ISO 9001:2008 Quality Management System
ISO 14001:2004 Environmental Management System
OHSAS 18001:2007 Occupational Health and Safety Management System

IQNet

THE INTERNATIONAL CERTIFICATION NETWORK

CERTIFICATE

Pneumax S.p.A.
24050 Lurano (BG)
Italy

Whole Company incl. production unit Supermeccanica S.r.l

Components for pneumatic automation

Management System

ISO 9001:2008 / ISO 14001:2004 / OHSAS 18001:2007

Standards and regulatory Compliance

Pneumax is pursuing total quality in full respect of environmental and safety conditions in compliance with **ISO 9001:2008**, **ISO 14001:2004** and **OHSAS 18001:2007** towards a high level of environmental awareness and sustainability.

Selection of Pneumatic Components for the Automotive Industry

Pneumax is a
ONE-SOURCE SUPPLIER
for the Automotive Industry
with a comprehensive line of:

- ✔ Pneumatic drives
- ✔ Valves
- ✔ Valve terminals
- ✔ Communication control blocks
- ✔ Compressed air preparation
- ✔ Grippers
- ✔ Exhaustive range of clamping, locating, handling and pivoting devices for BiW.

ECOMPACT

- Compact Cylinders according to ISO 21287 Standard
- The new barrel clean profile has two sensor slots on the three sides suitable for sensors housing, without need for adaptors
- Aluminum end caps
- All edges are carefully rounded
- Version with adjustable end stroke pneumatic cushioning is also available, still complying to the ISO 21287 required overall dimensions
- Non rotating version upon request

ECOLIGHT ISO 15552 STANDARD-BASED LIGHT CYLINDERS

- End plates: die-casting aluminum
- Rod: C43 chromed steel or stainless steel
- Barrel: aluminum alloy anodised
- Rod-guide bushing: spheroid bronze on steel band with PTFE coat
- Seals: Standard: NBR oil resistant rubber, PUR piston rod seals upon request
- Lightweight bodies and end caps

HL High Lights

1390...01R version with steel rodscraper

ECOFLAT

- Profiled tube has two "T" slots on the side hosting sensors without adaptors
- Two additional connections are also available on rear cover for cylinder supply
- Female rod/male rod
- Female push/pull rod-male push/pull rod

WHY PNX

ONE SOURCE SUPPLIER

Selection of Pneumatic Components for the Automotive Industry

RODLESS CYLINDERS

- Space saving option over conventional cylinders
- Heavy duty construction for demanding applications
- Profiled tube allows mounting of sensors on the two sides of carriage, by means of brackets
- Standard accessories include foot mounting brackets for installation on cylinder end caps, intermediate mounting brackets to give support to long stroke cylinders under load (over one metre), an oscillating coupling device for installation between the mounting plate and the load
- With linear control unit
- No maintenance

SHORT STROKE COMPACT CYLINDERS

- Profiled tube has three "T" slots on the three sides hosting sensors without adaptors
- A complete range of accessories makes them easy to install under any conditions
- Mounting pattern according to ISO 6431, to adapt to most of the mounts
- Single or double acting versions
- Non-rotating device available
- Tandem push with common or independent rods
- UNITOP version available

ISO 6432 STANDARD-BASED MICROCYLINDERS

- Threaded end covers
- Without rear eye version
- Push/pull rod version
- Rolled end covers
- Non-rotating hexagonal rod for applications where the cylinder is used as a guide and support
- Stainless Steel AISI 316 end covers available
- Nylon 66 reinforced with glass fibres end covers available

GUIDED COMPACT CYLINDERS

- Suitable for compression, conveyance, manipulation, pushing, lifting and stopping applications
- Single compact cylinder with integral guided rods, designed with installation flexibility and space saving features

The rod guide is available with:

- Self-lubricating bronze bushes – useful for absorbing lateral loads and forces, especially as a stopper
- Bearing bushes – guaranteeing high precision and uniform movement with low friction characteristics, useful with misaligned loads
- Mounting on three sides through holes or "T" slots
- Adjustable mounting holes in the front plate ensure safe and accurate assembly

HL High Lights

Metal rod scrapers as 6110 version

ROTARY ACTUATORS

- Cover plates: UNI 5079 aluminum alloy casting
- Central body: oxidised aluminum
- Pinion: cemented and tempered 18 NiCrMo4
- Rack: C43
- Barrel: anodised aluminum Ra = 0.3-0.5
- Sliding shoe: acetal resin
- Cushion bushings: hardened aluminum
- Piston: vulcanized rubber block on steel core with incorporated permanent magnet or without magnet plus rear spacer for non magnetic version
- Seals: NBR 80 shore rubber
- Cushion adjustment screw: nickel plated steel
- Rotating angle adjustment assy: nickel plated brass
- Female or male pinion

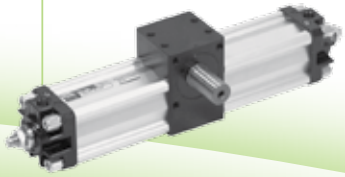

FRL COMPRESSED AIR PREPARATION

- Modular design
- No additional devices required for the assembly
- Zinc alloy body or reinforced technopolymer body with threaded aluminum insert connections
- Wall mounting possibility with M4 screws protected by covers
- Transparent technopolymer bowl screwed to the body
- Shock resistant bowl with technopolymer protection
- Water level visibility on 360° even with bowl protection assembled
- Automatic water drainage bowl available on request

WHY PNX

ONE SOURCE SUPPLIER

Selection of Pneumatic Components for the Automotive Industry

ISO 15407 VALVE MANIFOLD SERIES

- With electric control interface
- Aluminum die casted body
- Aluminum die casted sub-base
- 1/4" threaded connections
- Monostable and bistable
- Quick connection to sub-base through screws
- Multipolar through SUB-D 37 pin
- Multipolar through SUB-D 25 pin

OPTYMA VALVE MANIFOLD SERIES

- Vast array of valve sizes for every application
- Flow rate up to 550 Nl: solenoid pilots are low consumption and fitted on the same side of the valve
- Mono stable and bi stable valves with the same dimensions
- Easy and fast assembly on the sub base through one-screw mounting solution
- Possibility to replace a valve without the need of disconnecting the pneumatic pipes
- Electrical and pneumatic connections on the same side
- Possibility to operate with different pressures and vacuum
- Quick coupling connections for consumption, exhaust and air supply all on the same side

SERIAL SYSTEMS

Serial connections with:

- CANopen
- EtherCAT
- DeviceNet
- PROFIBUS
- PROFINET
- EtherNet

PARALLEL GRIPPERS

- The parallel grippers cater for larger openings (three different strokes for each diameter) with synchronised operation via a pinion-rack system with high strength thanks to a double piston mechanism

Radial grippers (180°)

Three-points grippers

Angle grippers

Mini slides

TECNO FUN

- Line of different logic functions which can be used everywhere in the secondary pneumatic circuit and can be installed directly onto the main pneumatic components (distributors or cylinders)
- Modular design allows multiple logic functions to be connected together easily

Available functions:

- Flow control valves
- Pressure regulators
- Block valves
- Quick exhaust valves
- OR gates
- AND gates
- Pressure gauges
- Pressure regulators + pressure gauges
- Block valves + flow control valves
- Block valves + quick exhaust valves

PANEL SYSTEMS

- Pneumax provides its customers with complete solutions, panel and cabinet assemblies upon control diagrams designs
- Custom configured, ready-to-install plates, with wiring and tubing included for a direct and quick connection to the machine
- Combinations of components from our product range will fulfil each required function

PROPORTIONAL REGULATORS

- Modern industrial applications require increasingly high performances from any pneumatic component. The speed and thrust of a pneumatic cylinder may need to vary dynamically when an operation is running. Our electronically controlled proportional regulators can modify pressure over time.
- Closed loop regulator – a pressure transducer in the circuit transmits a continuous analog signal to the microprocessor, which compares the reference value with the detected one and supplies the control solenoid valve accordingly.
- Three sizes are available, with flow rates up to 4,000 Nl/min.
- Mainly used in closing systems, painting systems, tensioning systems, packaging systems, pneumatic braking systems, force control for welding grippers, thickness compensation systems, balancing systems, laser cutting, pressure transducers for the control of modulating valves, test benches, force control for buffers on polishers, etc.

THE ULTIMATE CLAMPING TECHNOLOGY

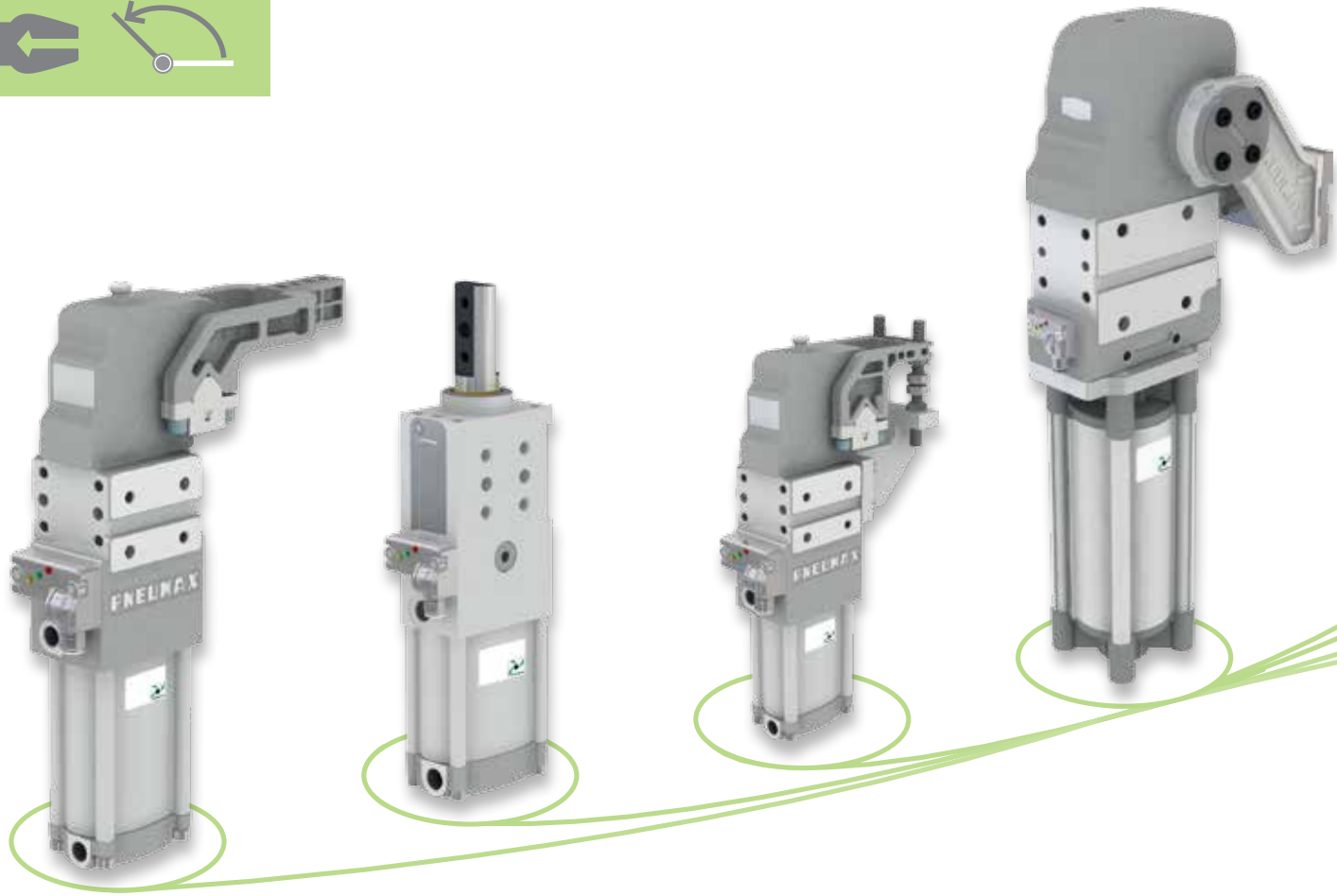

C-SERIES
NANO clamps
K-SERIES
HE-SERIES

R-SERIES
RC-SERIES
HP-SERIES
F-SERIES

J-SERIES
JK-SERIES

P-SERIES

clamping

locating

handling

pivoting

CLAMPING

C-SERIES European and NAAMS Standard clamps

nano powerclamps

K-SERIES High compensation clamps

HE-SERIES High Efficiency clamps

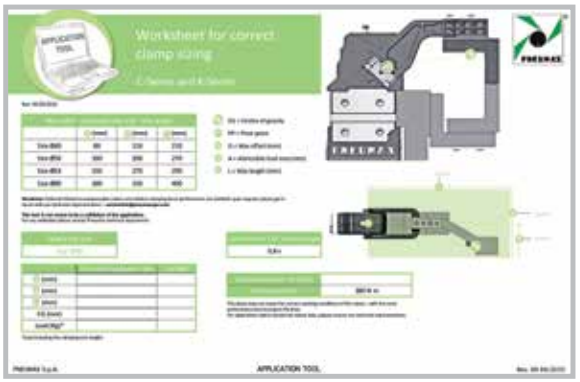

SEALED EFFECT

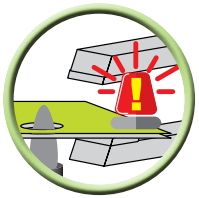

C_X SERIES

Calculation tool available upon demand

Please consult our technical representatives

THE LIGHTEST AND MOST COMPACT

Pneumax clamps' series have all been developed with a modern and compact design which goes towards **enhancing the operational performances**, such as the cycle time, combined with a very limited total weight without compromising their **strength** and **resistance**.
Due to the material chosen for the housings and the clamping arms, a high quality aluminum alloy, as well as due to the compact design of the cylinder and the housings, to minimize any interfering contours, Pneumax devices are **the lightest and most compact power clamps in the market**.

FIELD RELIABILITY

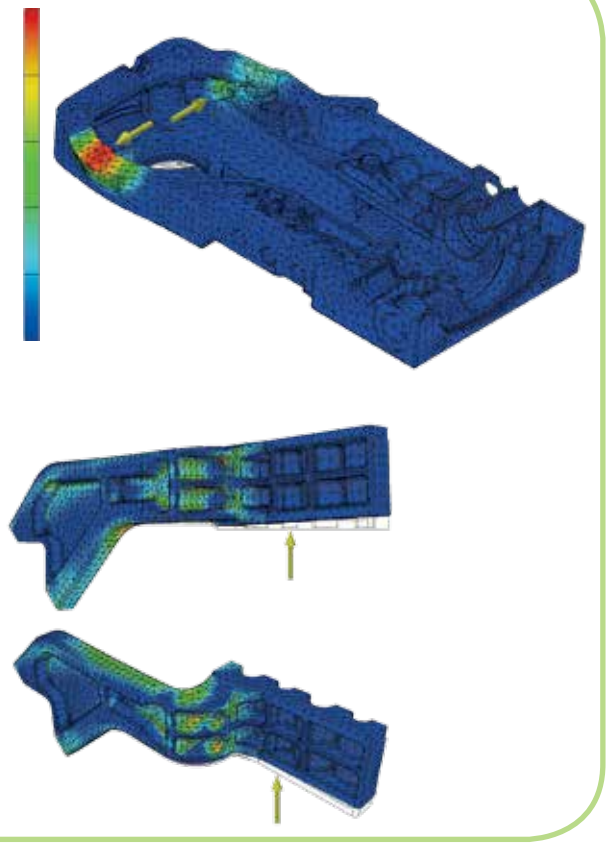

All our clamps' series are equipped with an **internal hard stop** which secures a **precise and backlash-free positioning**. No adjustment neither maintenance operations are required.
The **structural strength and stiffness** of the our clamps' series ensure limited deflection even with longer clamping arms.
The shaft and the housings are **so precisely guided** that no side backlash of the clamping arm can take place.

The sensor is **process proven and CE certified**: it is **immune to magnetic fields** complying to **EMC EN 60947-5-2:2007 + A1:2012**.
These features enhance the reliability of the clamps during their operating cycles and for the whole service life.

All the functional components have been calculated by the FEM (Finite Element Method) and have been designed for **maximum structural resistance and fatigue strength**.

MAINTENANCE FRIENDLY SOLUTIONS

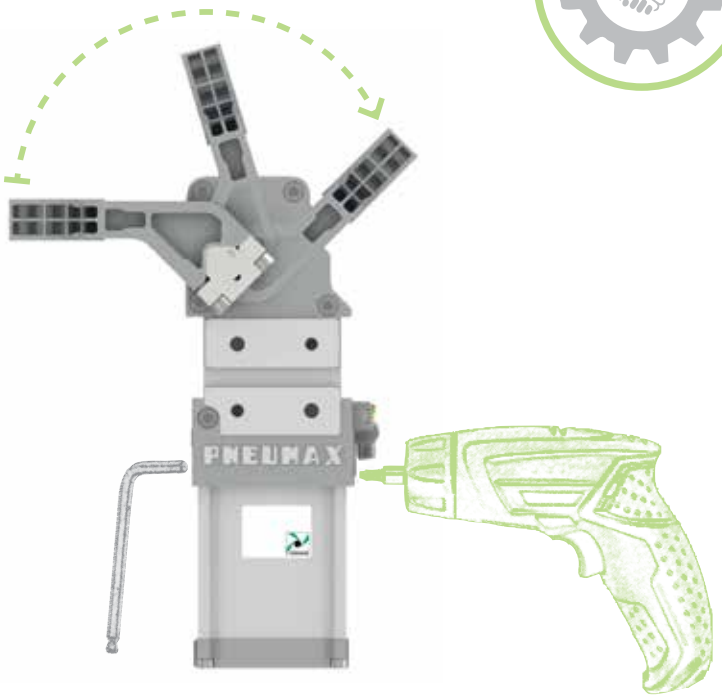

One access point to opening angle adjustment on each side

Easily accessible stepless opening angle adjustment. **Simple field adjustment** of the clamp arm opening angle **from the rear and front side** of the clamp with an Allen wrench or a screw gun,

WITH THE SHORTEST SET-UP TIME ON THE MARKET.

This allows for an optimum setting of the opening angle to provide the shortest cycle times without interference during load and unload procedures.
It generates savings in the warehouse management as the clamp can be set in any opening angle from 0° to 135° > only 1 clamp at stock for each size!
Complete reliability of the angle adjustment over time: integrated mechanism secures the adjusted position and prevents any sliding or opening angle displacement.
A **retain mechanism** secures the **adjustment tool in its seat** and prevents the Allen wrench to fall down during the adjustment procedure.
Even without air, the clamp can be toggle-locked through the adjustment means.

PATENTED

WHY PNX

HIGH RESISTANCE TO CONTAMINATION AND CORROSION

IP68 for the sensor
IP56 for the clamps

The clamp IP integrity is safeguarded even if the sensor has been removed.

Completely encapsulated design of the clamps: the toggle mechanism is fully encapsulated within the lightweight aluminum body construction. **Sandblasted housings and long life built-in zinc protected components in rust prevention**. The clamps are all equipped with **sealed roller bearings**, to prevent any contamination from entering the bearings.

Protection against weld spatter, dirt and coolants enabling clamps to operate continuously in extreme environments.

AN EFFICIENT CUSHIONING SYSTEM

Original cushioning system which prevents abrupt movements, decelerates the arm mass, enhances the cycle time and contributes to guaranteeing a longer life of the clamps.

Economic advantage: if mass complies with specification, **no flow control valve** is required as all clamps have calibrated fixed orifices into the ports.

Less noise

Less abrupt movements
no slamming – no shocks

Less impact forces generated
by dynamic stress factor

Shorter cycle time

Controlled movements

Longer life time

WHY PNX

INDUCTIVE SENSOR

1 for ALL

1 sensor for all product families and all series

- ✔ COMPLETELY ENCAPSULATED VERSION WHICH SAFEGUARDS THE **CLAMP IP INTEGRITY EVEN IF REMOVED**
- ✔ EASILY REMOVABLE
- ✔ STEPLESS ORIENTATION OF THE CONNECTOR
- ✔ ALL METAL SENSOR –IP68
- ✔ CE CONFORMITY DECLARATION
  EMC COMPLIANCE TO EN 60947-5-2:2007 + A1:2012
- ✔ OPTIMAL LED VISUALIZATION FROM EACH ANGULAR ORIENTATION

PATENTED

Quick set up and changeover: easy removal and a quick changeover which can be achieved in less than a minute.

INTEGRATED MANUAL OPERATION

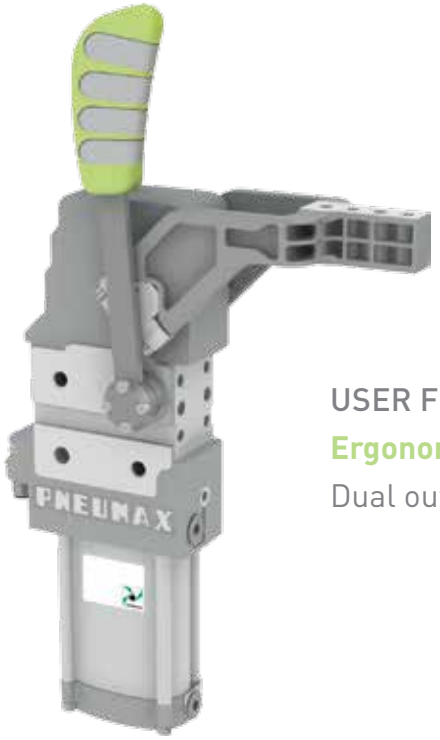

Robust solution with extremely
compact and flat dimensions.
Sturdy and durable.
Handle rotation area is smaller
than arm opening angle.
Secure, quick and easy mounting of the handle.

USER FRIENDLY SOLUTION

Ergonomic handle for a safe operation.
Dual output shaft.

The integrated manual operation guarantees that the toggle joint is engaged and requires a very low force to reach the irreversible condition.

PATENTED

WHY PNX

PNEUMAX ALUMINUM CLAMPING ARMS

The stiffness of power clamps is reached by complying to different parameters:

- ✔ configuration of the linkage
- ✔ stiffness of the housings
- ✔ stiffness of the clamping arms

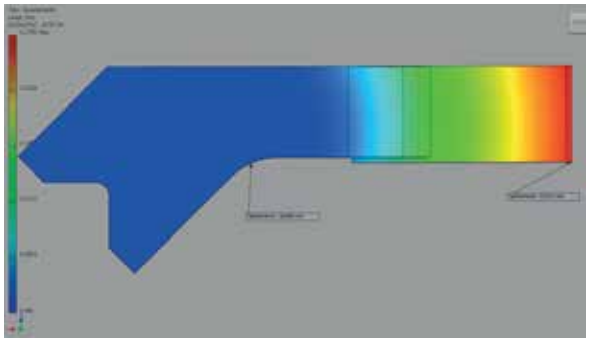

PNX solution offers a **CONSIDERABLE COMPACTNESS** of the **ARM STRUCTURE** which **ENHANCES** the arm **STIFFNESS**

PATENTED

Modularity: different offsets can be obtained from the same profile,

thus reactively responding to costumers' specific requirements, without the need of different molds.

PNEUMAX ALUMINUM CLAMPING ARMS

Higher LOAD CAPACITY

Aluminum arms are approximately

50% LIGHTER

than steel arms

this leaves more load capacity
to the clamp on its movement

OPTIMIZATION OF THE CLAMP'S SIZING

19 mm shaft – 15 mm offset

PART NO.	MATERIAL	VERSION	WEIGHT (kg)	MAX OP. ANGLE POS. 1	MAX OP. ANGLE POS. 2	MAX OP. ANGLE POS. 3	MAX OP. ANGLE POS. 4
B1901	Aluminum	Central	0.41	135°	115°	135°	80°
Q1901	Steel	Central	0.71	135°	115°	135°	80°
B1902	Aluminum	Right	0.43	135°	115°	135°	80°
Q1902	Steel	Right	0.79	135°	115°	135°	80°
B1903	Aluminum	Left	0.43	135°	115°	135°	80°
Q1903	Steel	Left	0.79	135°	115°	135°	80°
B1907	Aluminum	Central	0.41	135°	115°	135°	80°
B1908	Aluminum	Right	0.43	135°	115°	135°	80°
B1909	Aluminum	Left	0.43	135°	115°	135°	80°

Screws: M6x25 **Tightening torque:** 10 N m / 7.37 lb·ft

22 mm shaft – 15 mm offset

PART NO.	MATERIAL	VERSION	WEIGHT (kg)	MAX OP. ANGLE POS. 1	MAX OP. ANGLE POS. 2	MAX OP. ANGLE POS. 3	MAX OP. ANGLE POS. 4
B2201	Aluminum	Central	0.52	135°	115°	135°	80°
Q2201	Steel	Central	0.9	135°	115°	135°	80°
B2202	Aluminum	Right	0.54	135°	115°	135°	80°
Q2202	Steel	Right	0.93	135°	115°	135°	80°
B2203	Aluminum	Left	0.54	135°	115°	135°	80°
Q2203	Steel	Left	0.93	135°	115°	135°	80°

Screws: M8x25 **Tightening torque:** 25 N m / 18.43 lb·ft

25-32 mm ENCLOSED POWER CLAMPS

Compact, light power clamps in sizes 25 and 32 mm

3 MLN CYCLES

with toggle action mechanism for automotive manufacturing and metal processing industry

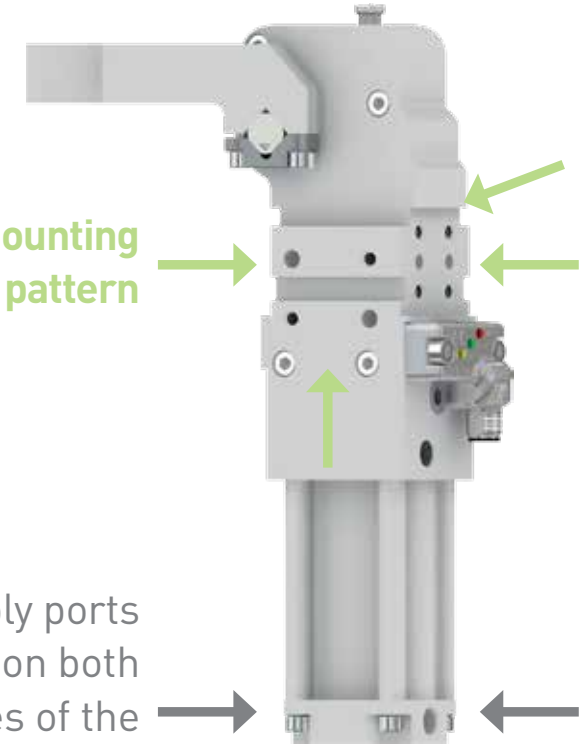

25-32 mm ENCLOSED POWER CLAMPS

Fully protected housing against weld contamination for the longest life in harsh environment applications

Maintenance-friendly solution
No lubrication neither preventive maintenance is required

FIELD RELIABILITY

Positional accuracy & repeatability:
anti-backlash design of the linkage

Same sensor, as used with sizes 40-80 mm
with stepless adjustable connector,
EMC compliance to EN 60947-5-2:2007 + A1:2012

During set-up operations, without air,
the linkage can be **toggle-locked** using
a screw gun or a flat Allen wrench

Manual operation
Robust handle with compact
and flat design, which can be
mounted right or left-side of the body

Effective opening position **cushioning**
performance. No adjustment required

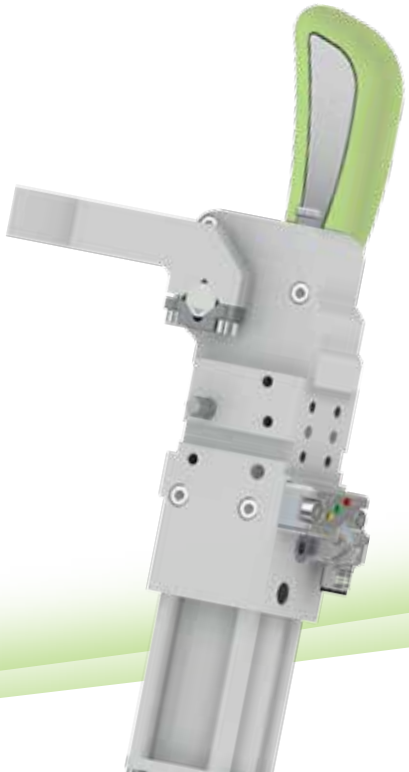

ORDERING STRING
NANO POWER CLAMPS

C	1	P	25	E	G	1	A	01

VERSION
C = clamp

MOUNTING PATTERN STANDARD
1 = European mount

OPERATION
P = pneumatic
D = pneumatic with manual operation
2 =
D0 = output shaft for manual operation - no lever and no handle included

SIZE
25 = Ø 25 mm
32 = Ø 32 mm

SENSOR
E = electronic sensor with M12 swivel connector - PNP
A = electronic sensor with M12 swivel connector - NPN
N = no sensor
B = electronic sensor with M8 swivel connector - PNP

PORTS
G = GAS

ARM MOUNT
1 =
2 =
3 =
4 =

ARM MATERIAL
A = aluminum

CLAMP ARM TYPE
01 = wishbone, central, 0 mm offset
04 = wishbone, central, 10 mm offset
13 = H, central, 0 mm offset
14 = H, central, 10 mm offset

Please see the charts in the datasheets for arm position as well as for max. opening angle

Subject to change without notice

C1P25E

Nano power clamp

European std

25 mm bore

WEIGHT

kg 0.75

* DIMENSIONAL TOLERANCE FOR DOWEL HOLES: ±0.02
DIMENSIONAL TOLERANCE FOR THREADED HOLES: ±0.1

REV. 00 - 02/10/2015

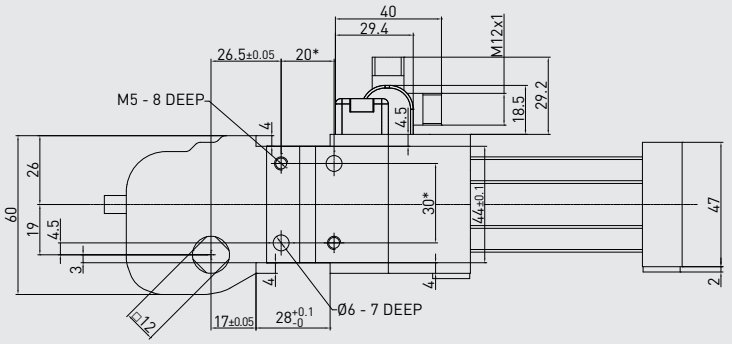

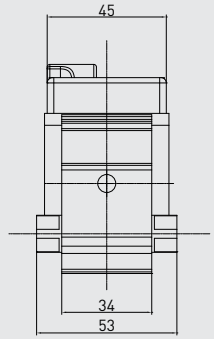

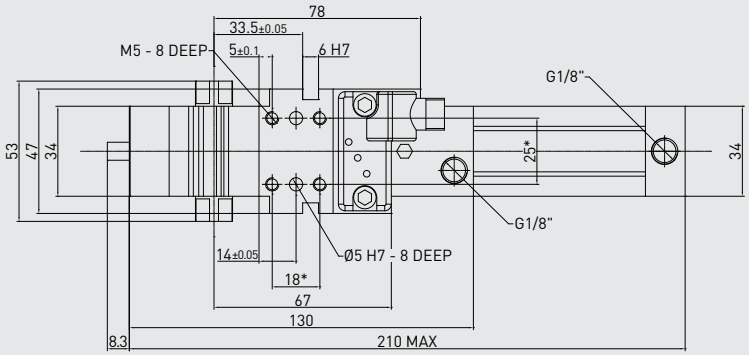

Technical features

Manual release button to open the linkage when air pressure is removed during setup. Pneumatic **ports on both sides** of the cylinder.	
Operating features	
Operating pressure	from 2 to 8 bar / from 30 to 115 psi
Lubrication	all the devices are lubricated for life at the factory. Inline air lubrication isn't required

Subject to change without notice

* DIMENSIONAL TOLERANCE FOR DOWEL HOLES: ±0.02
DIMENSIONAL TOLERANCE FOR THREADED HOLES: ±0.1

REV. 02 - 06/06/2018

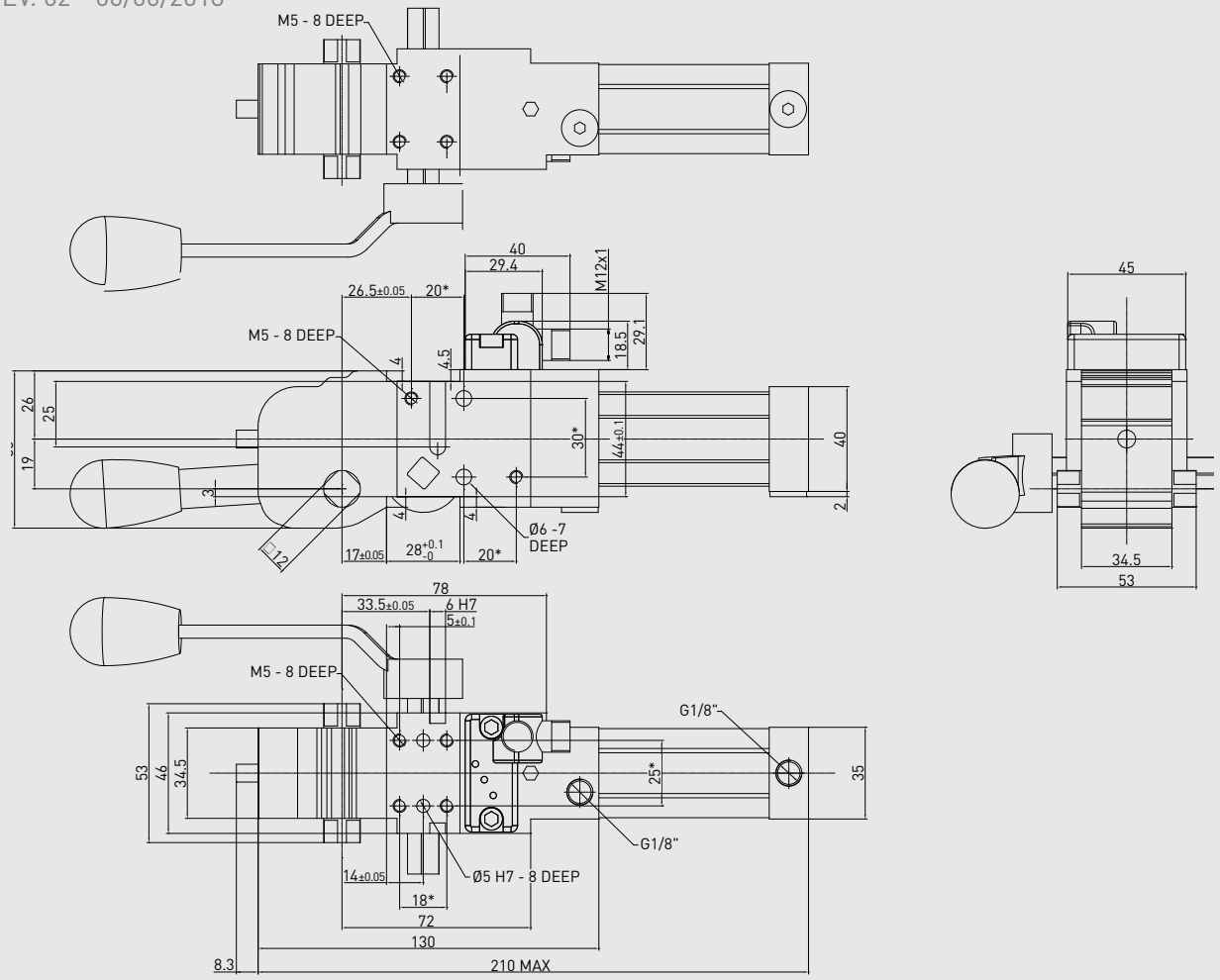

WEIGHT

kg 0.987

D2 handle included

C1D225E

Nano power clamp

European std

25 mm bore

With manual operation

Technical features

Manual release button to open the linkage when air pressure is removed during setup. Pneumatic **ports on both sides** of the cylinder.	
Operating features	
Operating pressure	from 2 to 8 bar / from 30 to 115 psi
Lubrication	all the devices are lubricated for life at the factory. Inline air lubrication isn't required

Subject to change without notice

CLAMPING ARMS

12 mm shaft
for clamps' size 25 mm

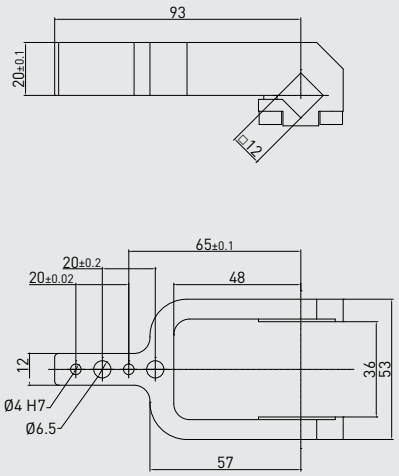

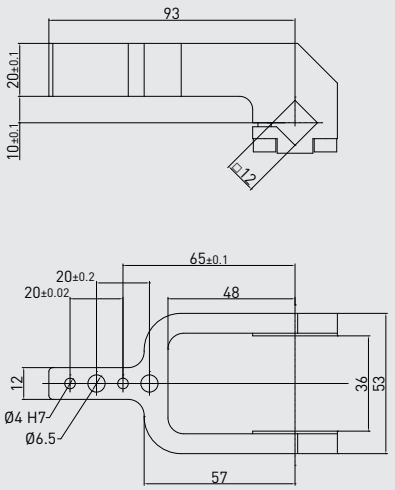

See "Special arm types" under the Accessories section at p. 236

12 mm shaft – 0 mm offset

PART NO.	MATERIAL	VERSION	WEIGHT (kg)	MAX OP. ANGLE POS. 1	MAX OP. ANGLE POS. 2	MAX OP. ANGLE POS. 3	MAX OP. ANGLE POS. 4
B12012	Aluminum	Central	0.127	135°	105°	135°	90°

Screws: M5x14 **Tightening torque:** 5 N m / 3.68 lb ft

12 mm shaft – 10 mm offset

PART NO.	MATERIAL	VERSION	WEIGHT (kg)	MAX OP. ANGLE POS. 1	MAX OP. ANGLE POS. 2	MAX OP. ANGLE POS. 3	MAX OP. ANGLE POS. 4
B12042	Aluminum	Central	0.135	135°	120°	N/A	45°

Screws: M5x14 **Tightening torque:** 5 N m / 3.68 lb ft

Subject to change without notice

FUNCTIONAL CHARTS
SIZE 25 mm

Clamping moment (at 5 bar / 72.5 psi)	50 N m / 36.87 lb·ft
Holding moment	75 N m / 55.31 lb·ft
Cycle time for max opening angle	< 0.8 s NO FLOW VALVE REQUIRED

The above data are meant for correct working conditions of the clamp – with the same performance level during its life time.

For applications which exceed the above data, please contact our sales representatives.

Tooling weight chart

5 bar operating pressure – 135° opening angle

REV. 00 - 18/11/2016

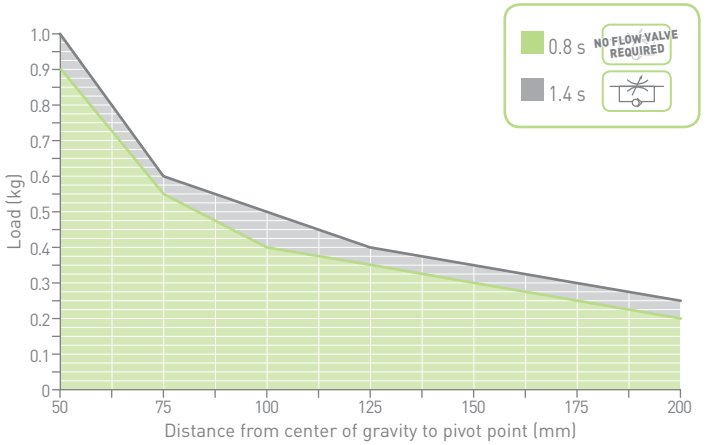

Subject to change without notice

C1P32E

Nano power clamp

European std

32 mm bore

WEIGHT

kg 0.98

* DIMENSIONAL TOLERANCE FOR DOWEL HOLES: ±0.02
DIMENSIONAL TOLERANCE FOR THREADED HOLES: ±0.1

REV. 02 - 13/09/2017

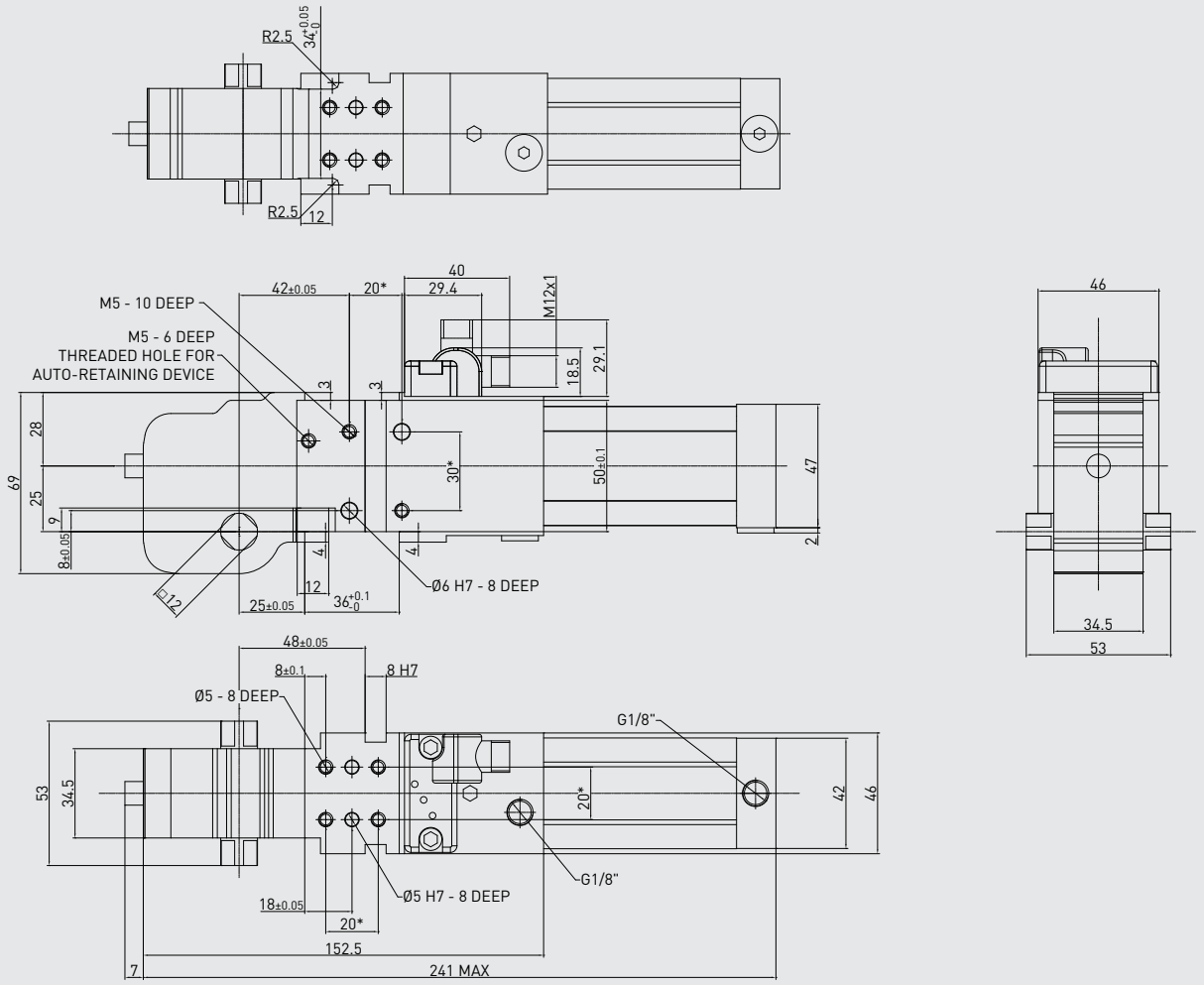

Technical features

Manual release button to open the linkage when air pressure is removed during setup. Pneumatic **ports on both sides** of the cylinder.	
Operating features	
Operating pressure	from 2 to 8 bar / from 30 to 115 psi
Lubrication	all the devices are lubricated for life at the factory. Inline air lubrication isn't required

Subject to change without notice

* DIMENSIONAL TOLERANCE FOR DOWEL HOLES: ±0.02
DIMENSIONAL TOLERANCE FOR THREADED HOLES: ±0.1

REV. 00 - 14/04/2016

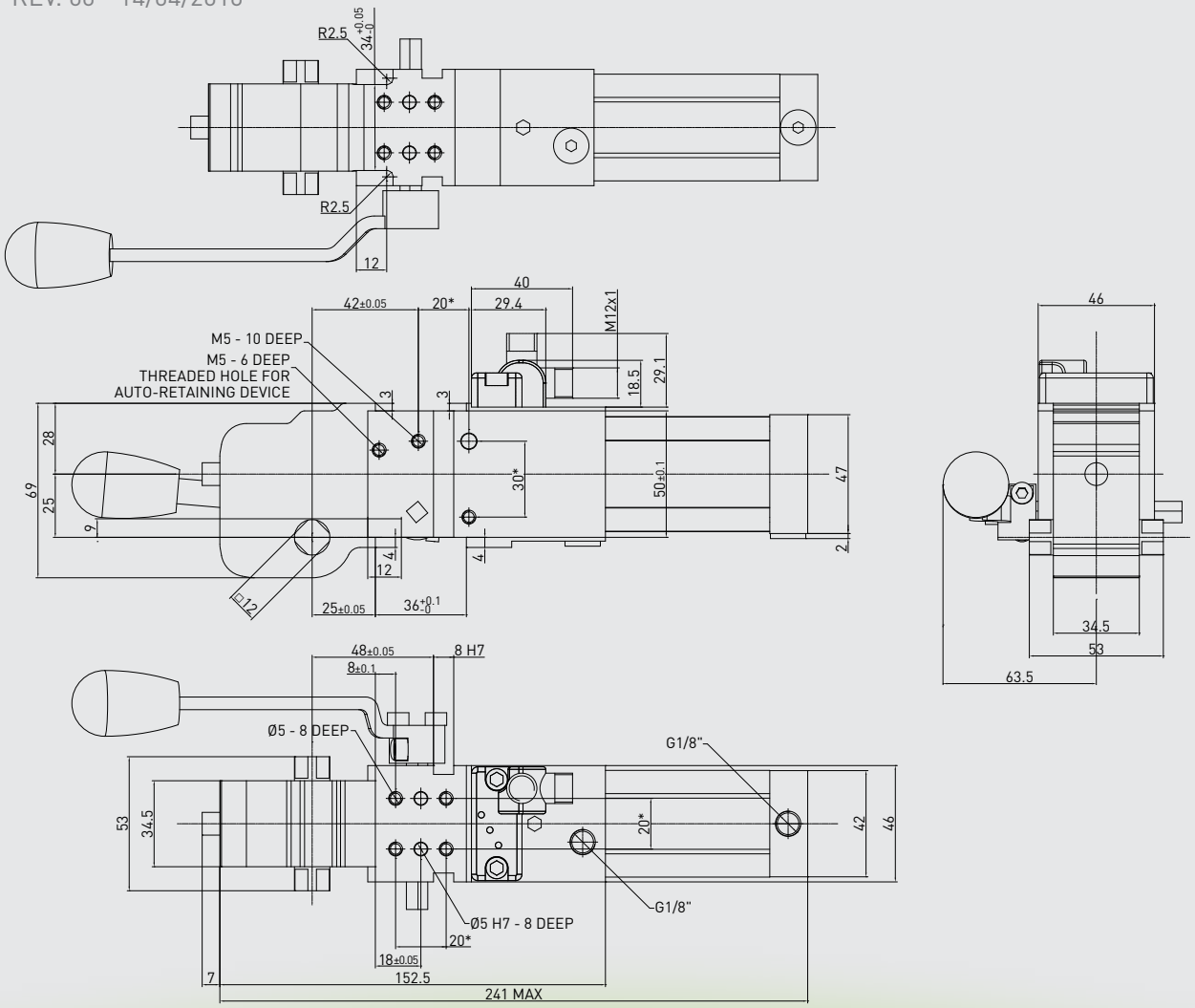

WEIGHT

kg 1.36

D2 handle included

C1D232E

Nano power clamp

European std

32 mm bore

With manual operation

Technical features

Manual release button to open the linkage when air pressure is removed during setup. Pneumatic **ports on both sides** of the cylinder.	
Operating features	
Operating pressure	from 2 to 8 bar / from 30 to 115 psi
Lubrication	all the devices are lubricated for life at the factory. Inline air lubrication isn't required

Subject to change without notice

C1P32E_ _A

Nano power clamp

European std

32 mm bore

WEIGHT

kg 0.98

* DIMENSIONAL TOLERANCE FOR DOWEL HOLES: ±0.02
DIMENSIONAL TOLERANCE FOR THREADED HOLES: ±0.1

REV. 00 - 28/8/17

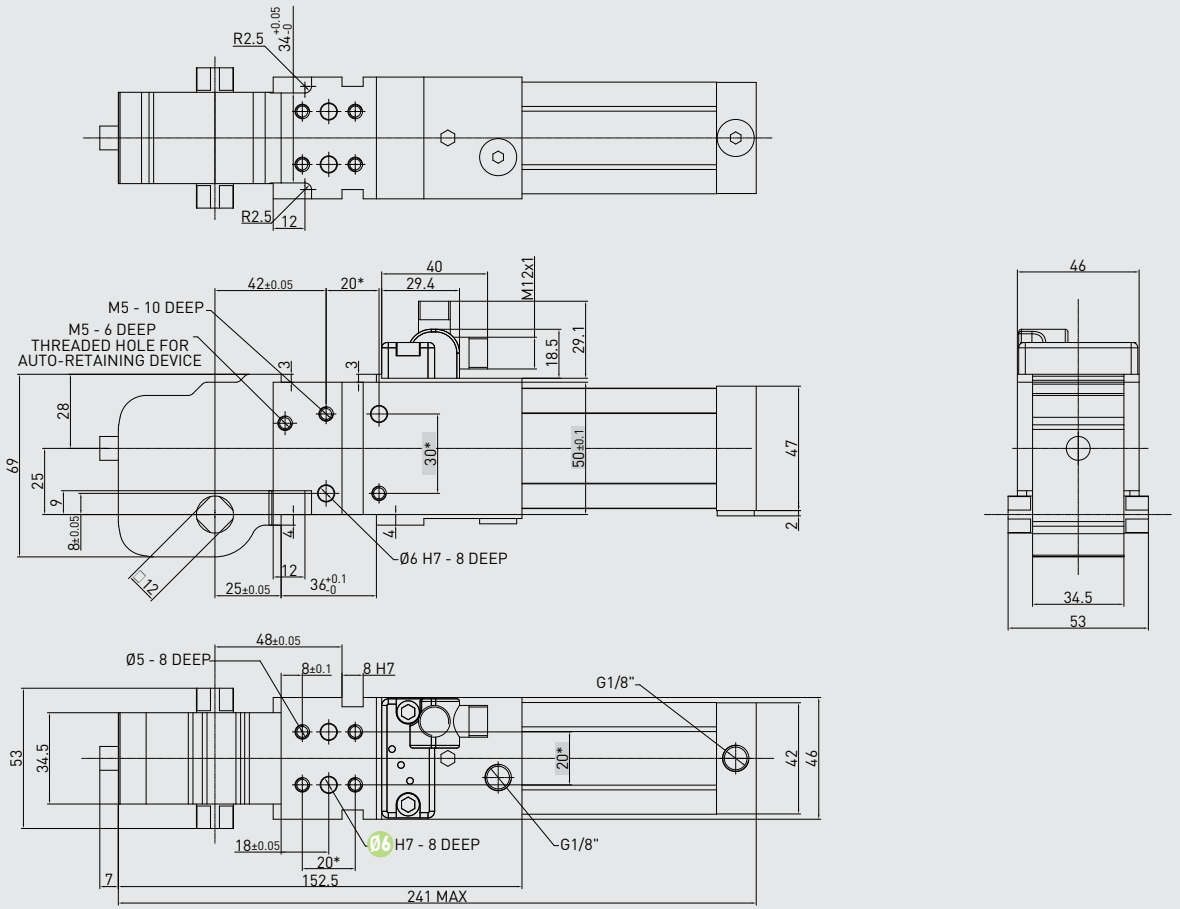

Technical features

Manual release button to open the linkage when air pressure is removed during setup. Pneumatic **ports on both sides** of the cylinder.	
Operating features	
Operating pressure	from 2 to 8 bar / from 30 to 115 psi
Lubrication	all the devices are lubricated for life at the factory. Inline air lubrication isn't required

Subject to change without notice

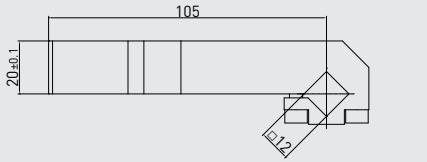

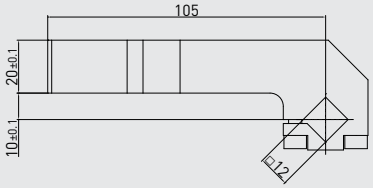

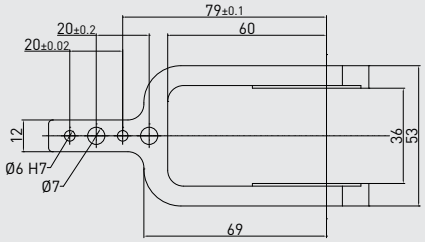

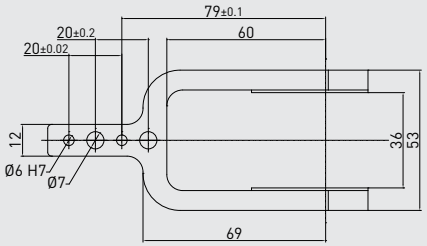

CLAMPING ARMS

12 mm shaft
for clamps' size 32 mm

See "Special arm types" under the Accessories section at p. 236

12 mm shaft – 0 mm offset

PART NO.	MATERIAL	VERSION	WEIGHT (kg)	MAX OP. ANGLE POS. 1	MAX OP. ANGLE POS. 2	MAX OP. ANGLE POS. 3	MAX OP. ANGLE POS. 4
B12013	Aluminum	Central	0.135	135°	112°	135°	90°

Screws: M5x14 **Tightening torque:** 5 N m / 3.68 lb ft

12 mm shaft – 10 mm offset

PART NO.	MATERIAL	VERSION	WEIGHT (kg)	MAX OP. ANGLE POS. 1	MAX OP. ANGLE POS. 2	MAX OP. ANGLE POS. 3	MAX OP. ANGLE POS. 4
B12043	Aluminum	Central	0.144	135°	123°	N/A	45°

Screws: M5x14 **Tightening torque:** 5 N m / 3.68 lb ft

Subject to change without notice

FUNCTIONAL CHARTS
SIZE 32 mm

Clamping moment (at 5 bar / 72.5 psi)	75 N m / 55.31 lb·ft
Holding moment	250 N m / 184.39 lb·ft
Cycle time for max opening angle	< 0.8 s NO FLOW VALVE REQUIRED

The above data are meant for correct working conditions of the clamp – with the same performance level during its life time.

For applications which exceed the above data, please contact our sales representatives.

Tooling weight chart

5 bar operating pressure – 135° opening angle

REV. 00 - 18/11/2016

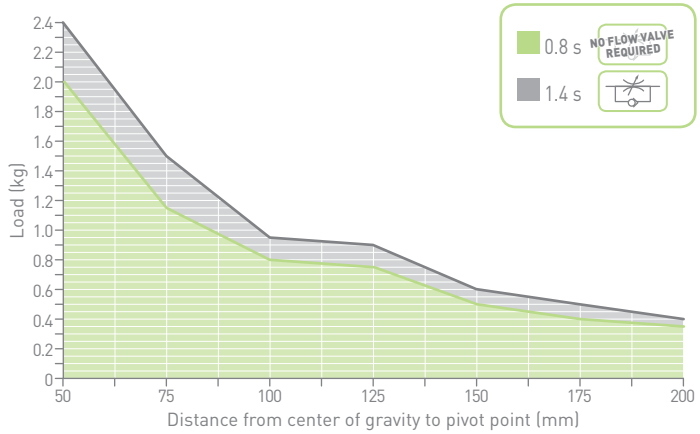

Subject to change without notice

MANUAL CLAMPS
C_M SERIES

MAINLY USED FOR PROTOTYPES AND MATERIAL PROCESSING

Same mounting pattern as conventional pneumatic clamps to allow a **consecutive automatization of the tooling without replacing the mountings**

Electronic sensor with metal case and swivel connector, the same used for power clamps

Fully enclosed aluminum body, to withstand welding spatter or debris from any workpiece processing

Available also as nano clamp

FULL INTERCHANGEABILITY WITH PNEUMATIC CLAMPS

Compact dimensions

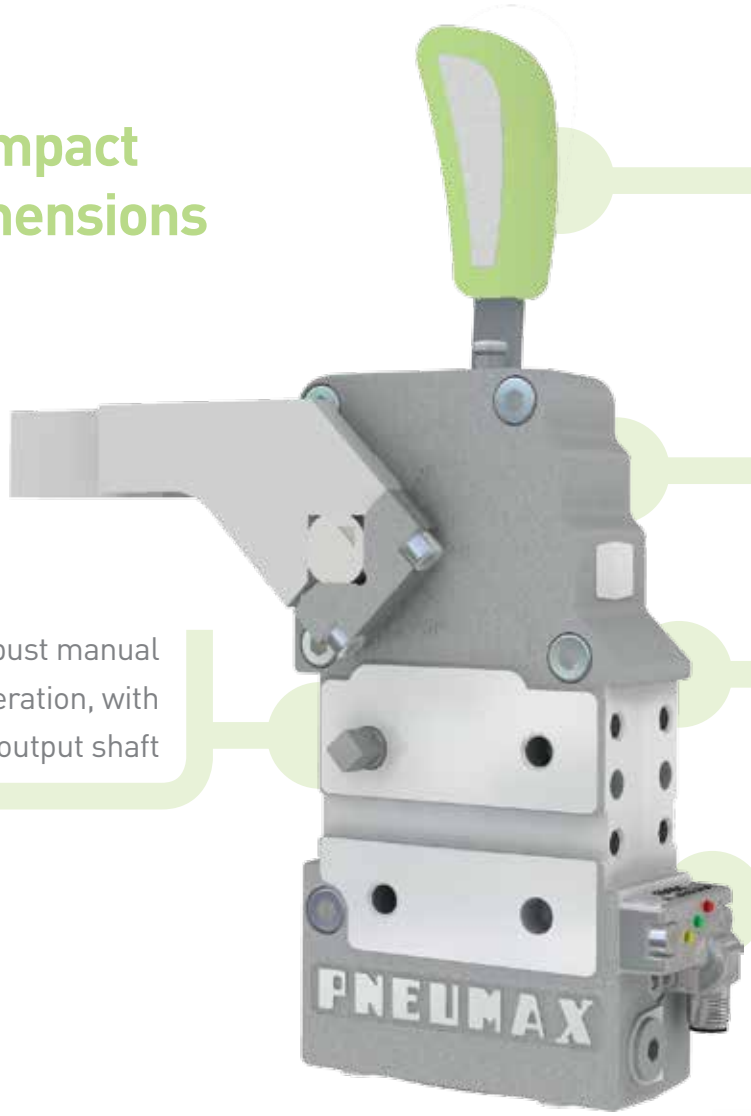

Weldable handlever

Toogle locking

4-sided mount

Sensor

Robust manual operation, with dual output shaft

Available in 32-40-50-63 mm bore, as NAAMS too

AR system

to maintain the load in the open position

3 mln cycles

ORDERING STRING
C1M-SERIES

C	1	M	32	E	4	A	01

VERSION
C = clamp

MOUNTING PATTERN STANDARD
1 = European mount

OPERATION
M = manual
2 =

SIZE
32 = Ø 32 mm

SENSOR
E = electronic sensor with M12 swivel connector - PNP
A = electronic sensor with M12 swivel connector - NPN
N = no sensor
B = electronic sensor with M8 swivel connector - PNP

FIXED OPENING ANGLE
1 = 135°
2 = 120°
3 = 90°
4 = 60°
5 = 45°

ARM MOUNT
1 =
2 =
3 =
4 =

ARM MATERIAL
A = aluminum

CLAMP ARM TYPE
01 = wishbone, central, 0 mm offset
04 = wishbone, central, 10 mm offset
13 = H, central, 0 mm offset
14 = H, central, 10 mm offset

Please see the charts in the datasheets for arm position as well as for max. opening angle

Subject to change without notice

C1M32E

Nano power clamp

European std

32 mm bore

WEIGHT

kg 1.248

* DIMENSIONAL TOLERANCE FOR DOWEL HOLES: ±0.02
DIMENSIONAL TOLERANCE FOR THREADED HOLES: ±0.1

REV. 00 - 26/01/2018

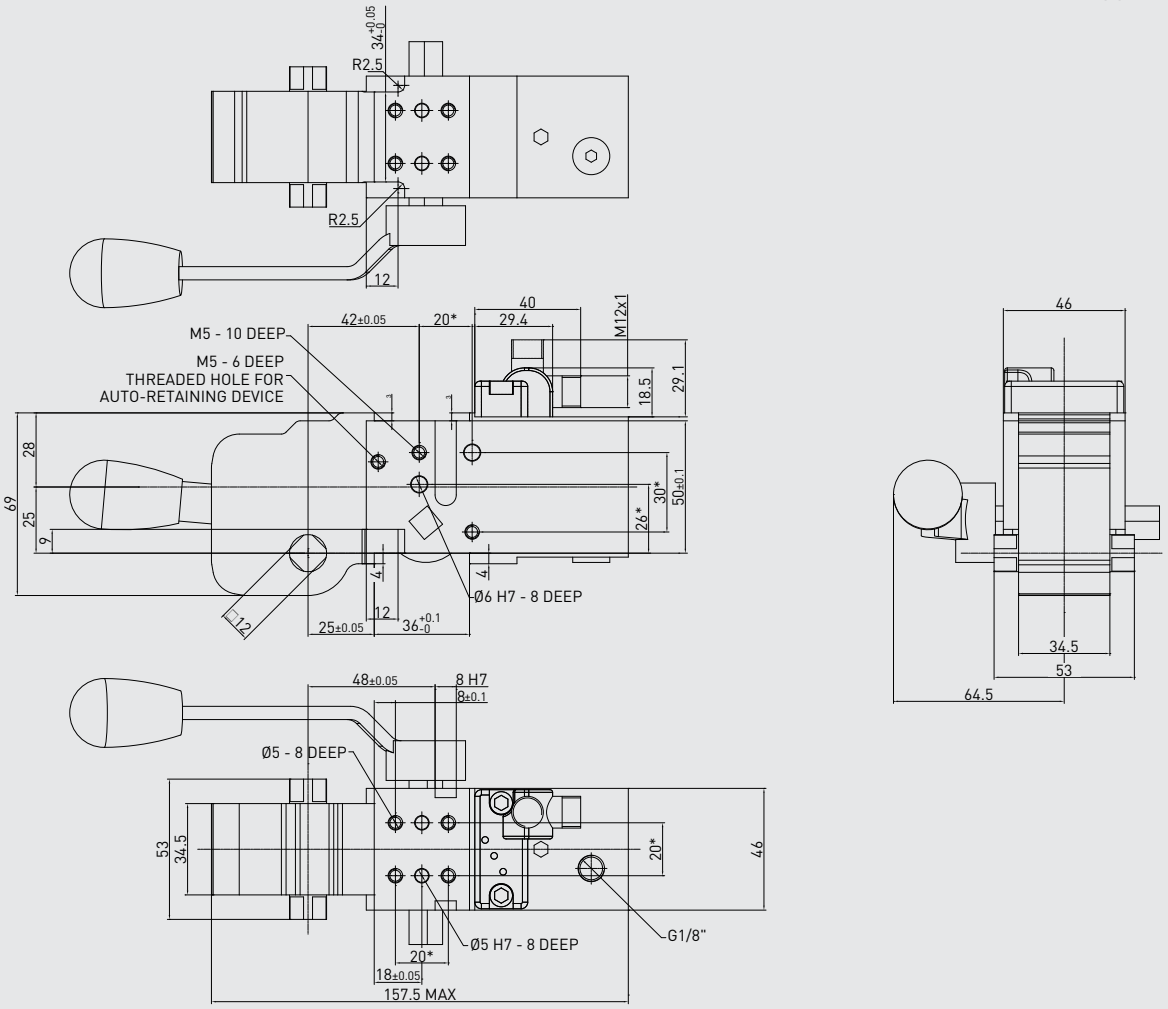

Technical features

Manual release button to open the linkage when air pressure is removed during setup.	
Operating features	
Lubrication	all the devices are lubricated for life at the factory. Inline air lubrication isn't required

Subject to change without notice

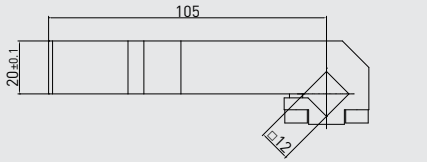

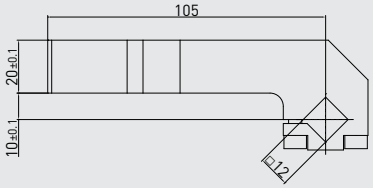

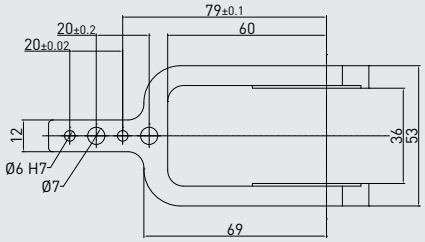

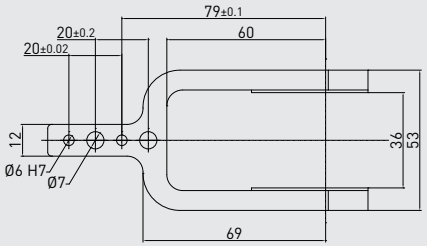

CLAMPING ARMS

12 mm shaft
for clamps' size 32 mm

See "Special arm types" under the Accessories section at p. 236

12 mm shaft – 0 mm offset

PART NO.	MATERIAL	VERSION	WEIGHT (kg)	MAX OP. ANGLE POS. 1	MAX OP. ANGLE POS. 2	MAX OP. ANGLE POS. 3	MAX OP. ANGLE POS. 4
B12013	Aluminum	Central	0.135	135°	112°	135°	90°

Screws: M5x14 **Tightening torque:** 5 N m / 3.68 lb ft

12 mm shaft – 10 mm offset

PART NO.	MATERIAL	VERSION	WEIGHT (kg)	MAX OP. ANGLE POS. 1	MAX OP. ANGLE POS. 2	MAX OP. ANGLE POS. 3	MAX OP. ANGLE POS. 4
B12043	Aluminum	Central	0.144	135°	123°	N/A	45°

Screws: M5x14 **Tightening torque:** 5 N m / 3.68 lb ft

Subject to change without notice

FUNCTIONAL CHARTS
SIZE 32 mm

Clamping moment	75 N m / 55.31 lb·ft
Holding moment	250 N m / 184.39 lb·ft

The above data are meant for correct working conditions of the clamp – with the same performance level during its life time.

For applications which exceed the above data, please contact our sales representatives.

Tooling weight chart

5 bar operating pressure – 135° opening angle

REV. 00 - 18/11/2016

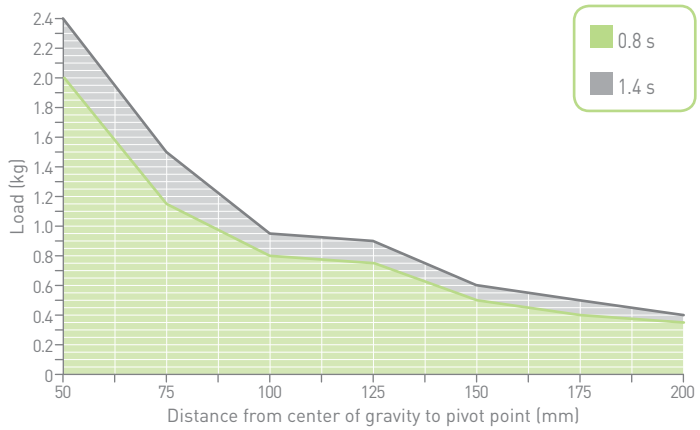

Subject to change without notice

ORDERING STRING C1-SERIES

C	1	P	40	E	G	4	S	01

VERSION
C = clamp

MOUNTING PATTERN STANDARD
1 = European mount

OPERATION
P = pneumatic
M = manual
D = pneumatic with manual operation
D0 = output shaft for manual operation - no lever and no handle included

for size 40 - 50 - 63 mm
1 = **2** =

for size 40 mm
3 =

SIZE
40 = Ø 40 mm
50 = Ø 50 mm
63 = Ø 63 mm
80 = Ø 80 mm

SENSOR
E = electronic sensor with M12 swivel connector - PNP
A = electronic sensor with M12 swivel connector - NPN
N = no sensor
B = electronic sensor with M8 swivel connector - PNP

PORTS
G = GAS
N = NPT
D = dual GAS ports on rear end cap
A = dual NPT ports on rear end cap

ARM MOUNT
1 = **3** =
2 = **4** =

ARM MATERIAL
A = aluminum
S = steel

CLAMP ARM TYPE
01 = wishbone, central, 15 mm offset, Ø 6H7*
02 = wishbone, right, 15 mm offset, Ø 6H7*
03 = wishbone, left, 15 mm offset, Ø 6H7*
04 = wishbone, central, 45 mm offset, Ø 6H7
05 = wishbone, right, 45 mm offset, Ø 6H7
06 = wishbone, left, 45 mm offset, Ø 6H7

Please see the charts in the datasheets for arm position as well as for max. opening angle

*for size 80 mm > 20 mm offset

Subject to change without notice

C1P40E

Power clamp

European std

40 mm bore

WEIGHT

kg 1.45

* DIMENSIONAL TOLERANCE FOR DOWEL HOLES: ±0.02
DIMENSIONAL TOLERANCE FOR THREADED HOLES: ±0.1

REV. 00 - 31/03/2015

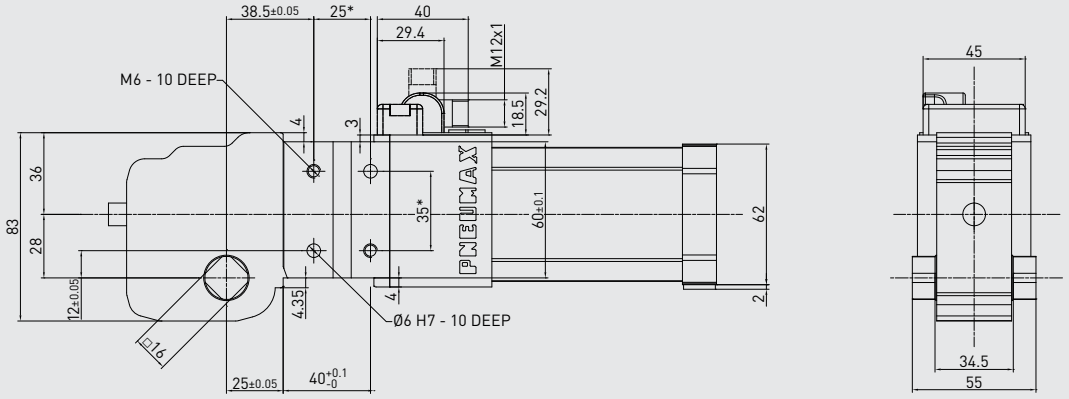

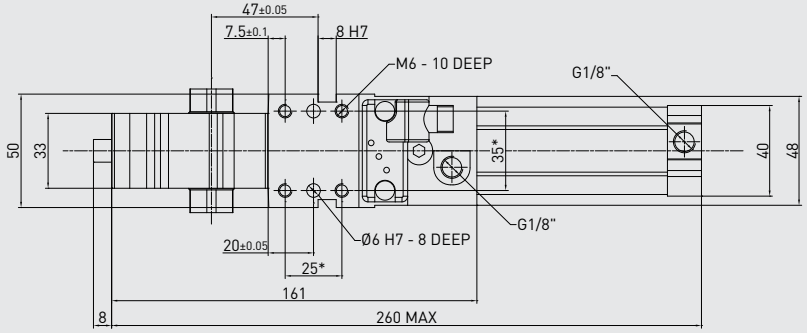

Technical features

Manual release button to open the linkage when air pressure is removed during setup. Pneumatic **ports on both sides** of the cylinder.	
Operating features	
Operating pressure	from 2 to 8 bar / from 30 to 115 psi
Lubrication	all the devices are lubricated for life at the factory. Inline air lubrication isn't required

Subject to change without notice

* DIMENSIONAL TOLERANCE FOR DOWEL HOLES: ±0.02
DIMENSIONAL TOLERANCE FOR THREADED HOLES: ±0.1

REV. 00 - 17/06/2015

WEIGHT

kg 1.75

D1 handle included

C1D_40E

Power clamp

European std

40 mm bore

With manual operation

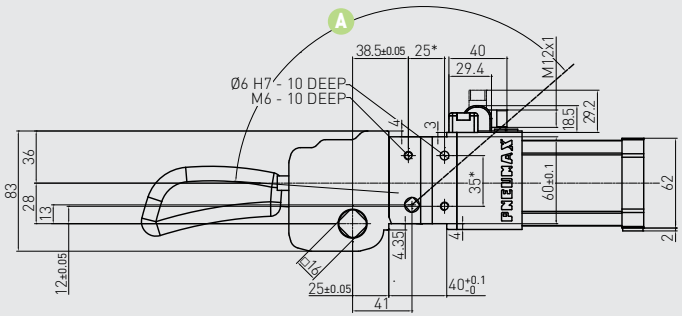

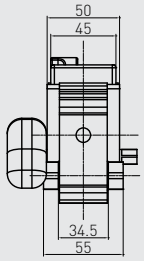

Manual operation

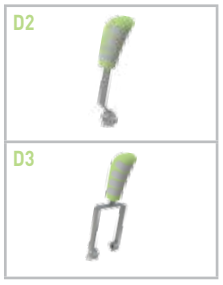

D1 VERSION

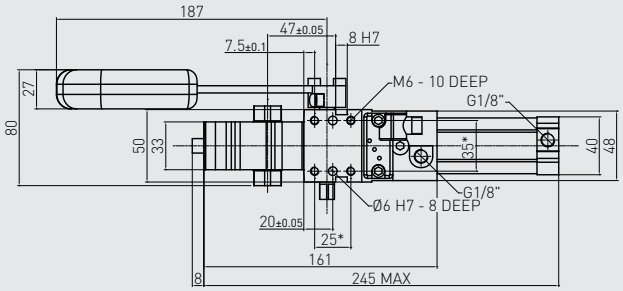

D2 VERSION

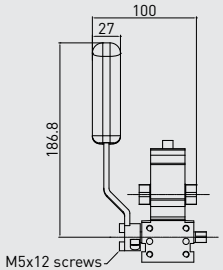

D3 VERSION

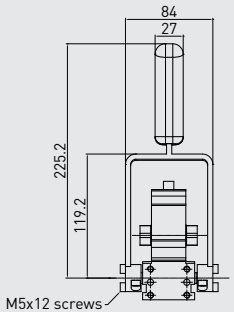

Handle swivel angle

Arm opening angle	Handle swivel angle A
0°	4.12°
15°	22.65°
30°	38.2°
45°	58.4°
60°	83.6°
75°	107.6°
90°	123.6°
105°	132.75°
120°	137.7°
135°	140°

Subject to change without notice

CLAMPING ARMS

16 mm shaft

Aluminum

Steel

See "Special arm types" under the Accessories section at p. 236

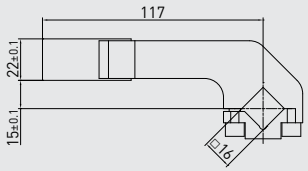

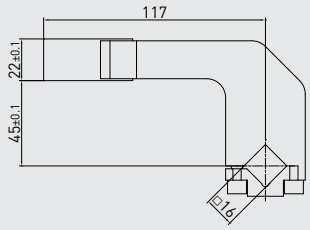

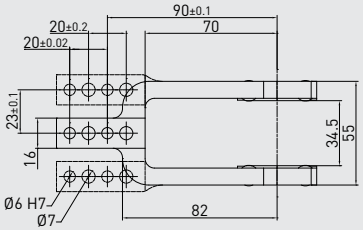

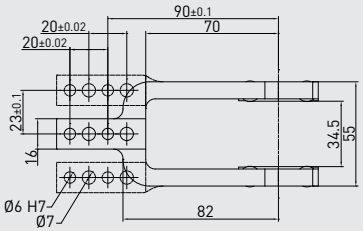

16 mm shaft – 15 mm offset

PART NO.	MATERIAL	VERSION	WEIGHT (kg)	MAX OP. ANGLE POS. 1	MAX OP. ANGLE POS. 2	MAX OP. ANGLE POS. 3	MAX OP. ANGLE POS. 4
B1601	Aluminum	Central	0.24	135°	135°	N/A	45°
Q1601	Steel	Central	0.44	135°	135°	N/A	45°
B1602	Aluminum	Right	0.24	135°	135°	N/A	45°
Q1602	Steel	Right	0.46	135°	135°	N/A	45°
B1603	Aluminum	Left	0.24	135°	135°	N/A	45°
Q1603	Steel	Left	0.46	135°	135°	N/A	45°

Screws: M6x20 **Tightening torque:** 10 N m / 7.37 lb·ft

16 mm shaft – 45 mm offset

PART NO.	MATERIAL	VERSION	WEIGHT (kg)	MAX OP. ANGLE POS. 1	MAX OP. ANGLE POS. 2	MAX OP. ANGLE POS. 3	MAX OP. ANGLE POS. 4
B1604	Aluminum	Central	0.3	135°	135°	N/A	45°
Q1604	Steel	Central	0.55	135°	135°	N/A	45°
B1605	Aluminum	Right	0.3	135°	135°	N/A	45°
Q1605	Steel	Right	0.57	135°	135°	N/A	45°
B1606	Aluminum	Left	0.3	135°	135°	N/A	45°
Q1606	Steel	Left	0.57	135°	135°	N/A	45°

Screws: M6x20 **Tightening torque:** 10 N m / 7.37 lb·ft

Subject to change without notice

FUNCTIONAL CHARTS
SIZE 40 mm

Clamping moment (at 5 bar / 72.5 psi)	130 N m / 95.88 lb·ft
Holding moment	380 N m / 280.27 lb·ft

The above data are meant for correct working conditions of the clamp – with the same performance level during its life time.

For applications which exceed the above data, please contact our sales representatives.

Air consumption

Air consumption for complete cycle (opening and closing) REV. 00 - 17/06/2015

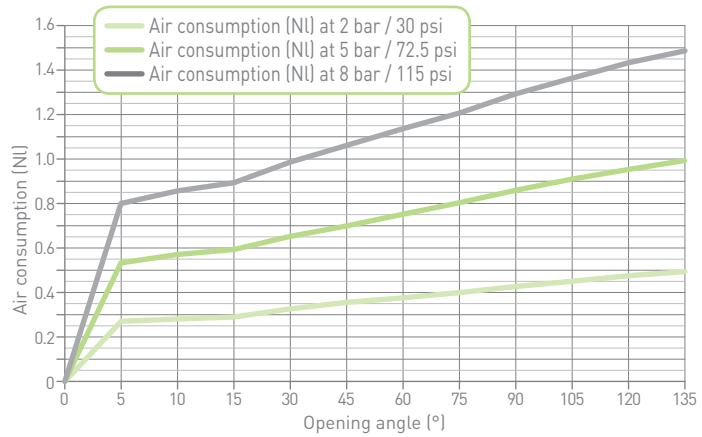

Tooling weight chart

5 bar operating pressure – 135° opening angle REV. 00 - 17/06/2015

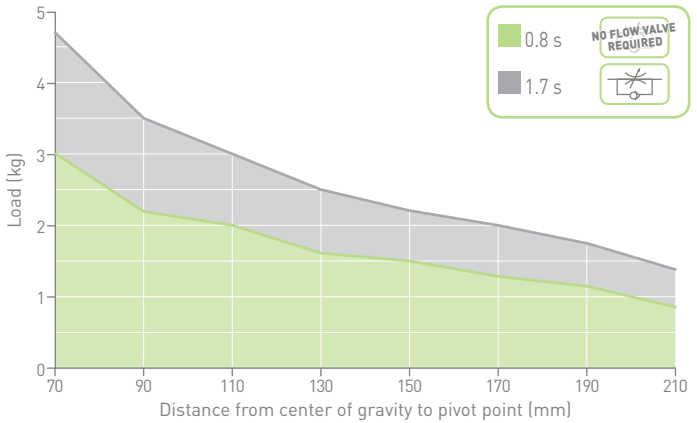

Calculation tool available upon demand

Please consult our technical representatives

Subject to change without notice

C1P50E

Power clamp

European std

50 mm bore

WEIGHT

kg 2.7

* DIMENSIONAL TOLERANCE FOR DOWEL HOLES: ±0.02
DIMENSIONAL TOLERANCE FOR THREADED HOLES: ±0.1

REV. 00 - 31/03/2015

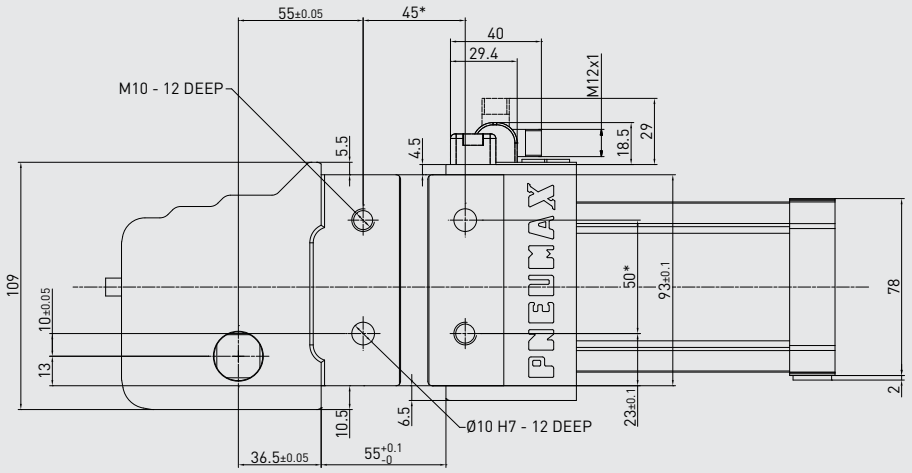

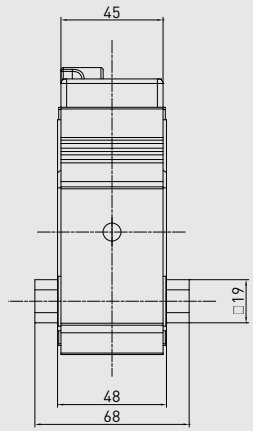

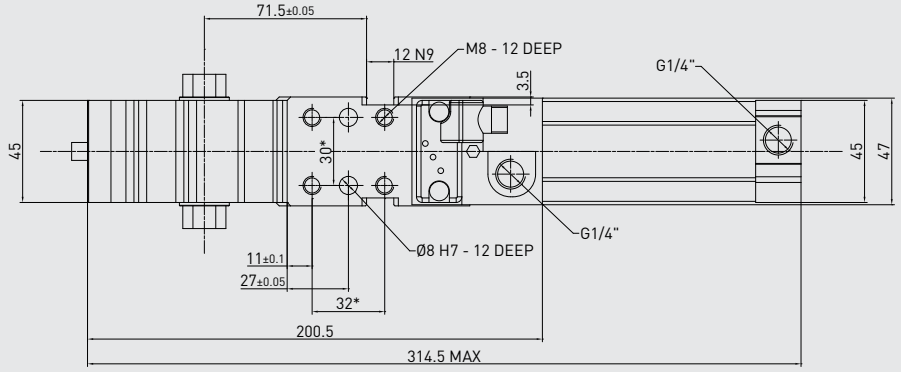

Technical features

Manual release button to open the linkage when air pressure is removed during setup. Pneumatic **ports on both sides** of the cylinder.	
Operating features	
Operating pressure	from 2 to 8 bar / from 30 to 115 psi
Lubrication	all the devices are lubricated for life at the factory. Inline air lubrication isn't required

Subject to change without notice

* DIMENSIONAL TOLERANCE FOR DOWEL HOLES: ±0.02
DIMENSIONAL TOLERANCE FOR THREADED HOLES: ±0.1

REV. 00 - 16/06/2015

WEIGHT

kg 3.1

D1 handle included

C1D_50E

Power clamp

European std

50 mm bore

With manual operation

Manual operation

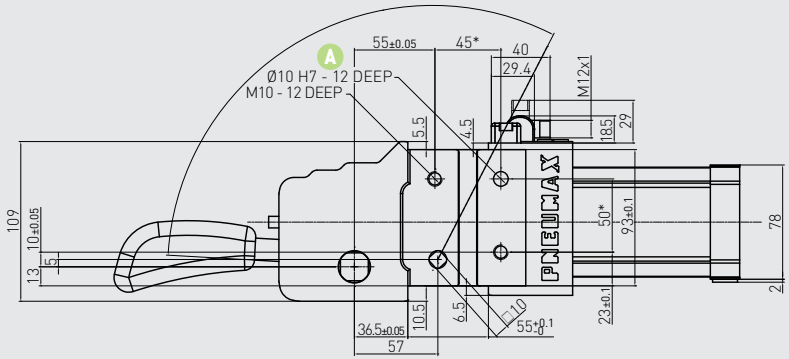

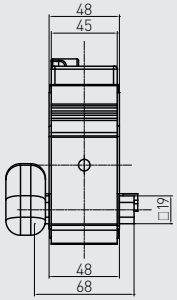

D1 VERSION

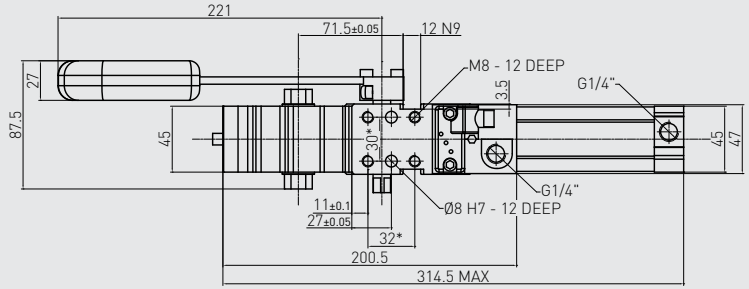

D2 VERSION

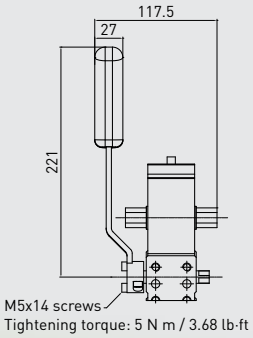

Handle swivel angle

Arm opening angle	Handle swivel angle A
0°	3.25°
15°	27°
30°	43°
45°	59.3°
60°	75.4°
75°	89.75°
90°	101°
105°	109°
120°	114.25°
135°	117.2°

Subject to change without notice

CLAMPING ARMS

19 mm shaft

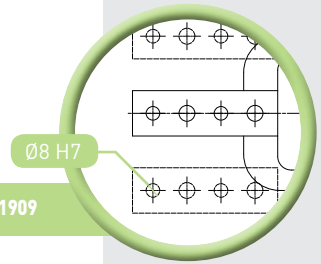

Mount pattern for B1907 - B1908 - B1909

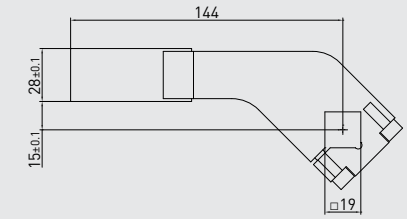

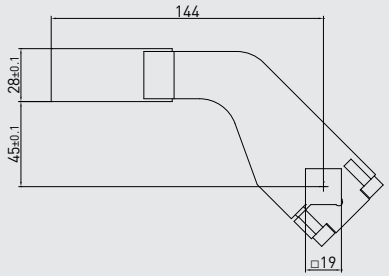

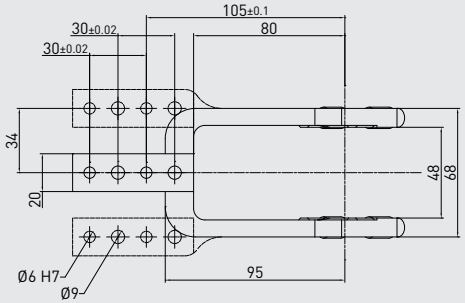

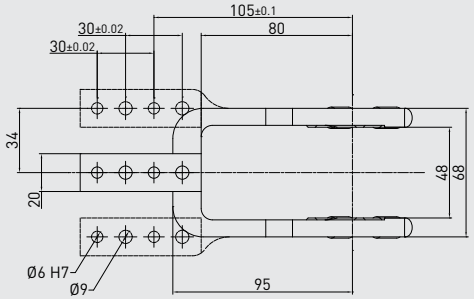

19 mm shaft – 15 mm offset

PART NO.	MATERIAL	VERSION	WEIGHT (kg)	MAX OP. ANGLE POS. 1	MAX OP. ANGLE POS. 2	MAX OP. ANGLE POS. 3	MAX OP. ANGLE POS. 4
B1901	Aluminum	Central	0.41	135°	115°	135°	80°
Q1901	Steel	Central	0.71	135°	115°	135°	80°
B1902	Aluminum	Right	0.43	135°	115°	135°	80°
Q1902	Steel	Right	0.79	135°	115°	135°	80°
B1903	Aluminum	Left	0.43	135°	115°	135°	80°
Q1903	Steel	Left	0.79	135°	115°	135°	80°
B1907	Aluminum	Central	0.41	135°	115°	135°	80°
B1908	Aluminum	Right	0.43	135°	115°	135°	80°
B1909	Aluminum	Left	0.43	135°	115°	135°	80°

Screws: M6x25 **Tightening torque:** 10 N m / 7.37 lb·ft

19 mm shaft – 45 mm offset

PART NO.	MATERIAL	VERSION	WEIGHT (kg)	MAX OP. ANGLE POS. 1	MAX OP. ANGLE POS. 2	MAX OP. ANGLE POS. 3	MAX OP. ANGLE POS. 4
B1904	Aluminum	Central	0.45	135°	135°	135°	80°
Q1904	Steel	Central	0.77	135°	135°	135°	80°
B1905	Aluminum	Right	0.46	135°	135°	135°	80°
Q1905	Steel	Right	0.81	135°	135°	135°	80°
B1906	Aluminum	Left	0.46	135°	135°	135°	80°
Q1906	Steel	Left	0.81	135°	135°	135°	80°

Screws: M6x25 **Tightening torque:** 10 N m / 7.37 lb·ft

See "Special arm types" under the Accessories section at p. 236

Subject to change without notice

FUNCTIONAL CHARTS
SIZE 50 mm

Clamping moment (at 5 bar / 72.5 psi)	185 N m / 136.44 lb·ft
Holding moment	800 N m / 590.04 lb·ft

The above data are meant for correct working conditions of the clamp – with the same performance level during its life time.

For applications which exceed the above data, please contact our sales representatives.

Air consumption

Air consumption for complete cycle (opening and closing) REV. 00 - 16/06/2015

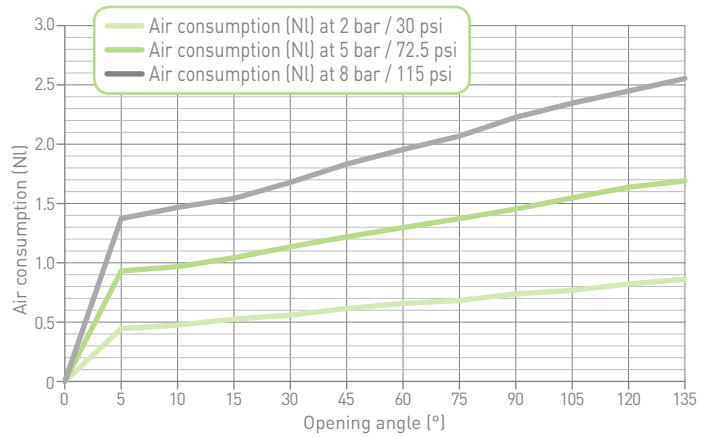

Tooling weight chart

5 bar operating pressure – 135° opening angle REV. 00 - 16/06/2015

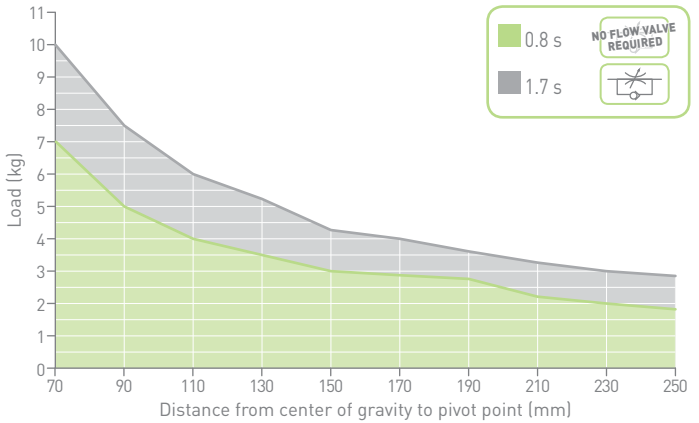

Calculation tool available upon demand

Please consult our technical representatives

Subject to change without notice

C1P63E

Power clamp

European std

63 mm bore

WEIGHT

kg 3.5

* DIMENSIONAL TOLERANCE FOR DOWEL HOLES: ±0.02
DIMENSIONAL TOLERANCE FOR THREADED HOLES: ±0.1

REV. 00 - 31/03/2015

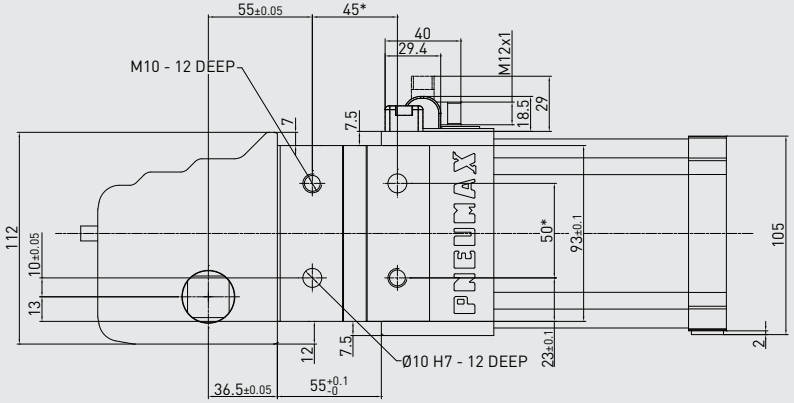

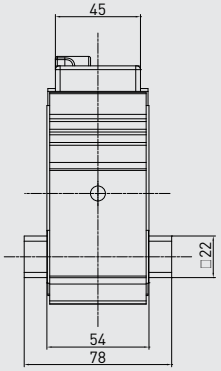

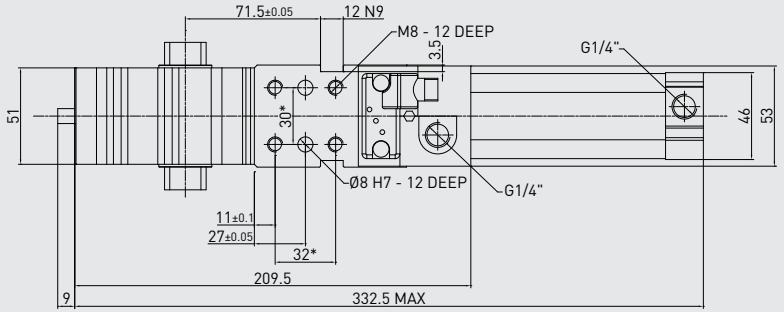

Technical features

Manual release button to open the linkage when air pressure is removed during setup. Pneumatic **ports on both sides** of the cylinder.	
Operating features	
Operating pressure	from 2 to 8 bar / from 30 to 115 psi
Lubrication	all the devices are lubricated for life at the factory. Inline air lubrication isn't required

Subject to change without notice

* DIMENSIONAL TOLERANCE FOR DOWEL HOLES: ±0.02
DIMENSIONAL TOLERANCE FOR THREADED HOLES: ±0.1

REV. 00 - 17/06/2015

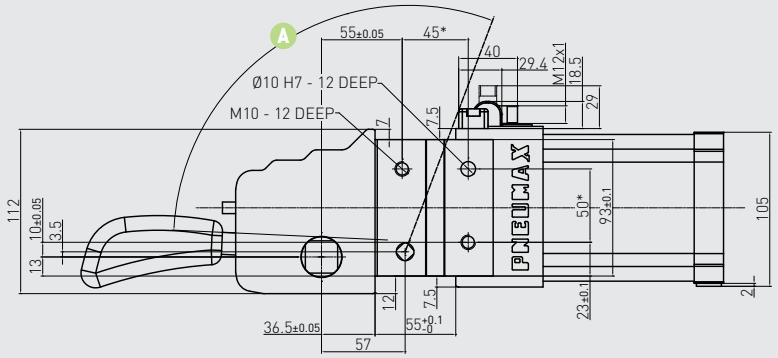

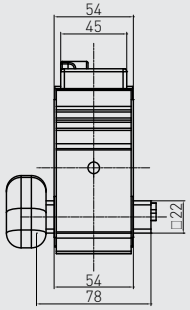

WEIGHT

kg 3.93

D1 handle included

Manual operation

C1D_63E

Power clamp

European std

63 mm bore

With manual operation

D1 VERSION

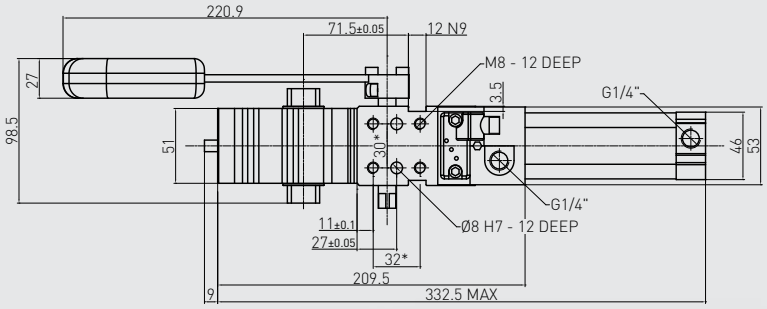

D2 VERSION

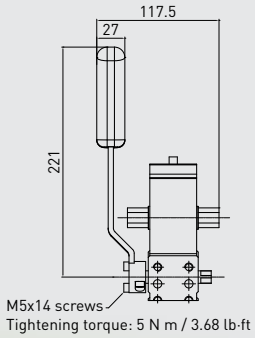

Handle swivel angle

Arm opening angle	Handle swivel angle A
0°	2.65°
15°	26.35°
30°	41.38°
45°	56°
60°	70.38°
75°	83.43°
90°	94°
105°	102°
120°	107°
135°	110.7°

Subject to change without notice

CLAMPING ARMS

22 mm shaft

See "Special arm types" under the Accessories section at p. 236

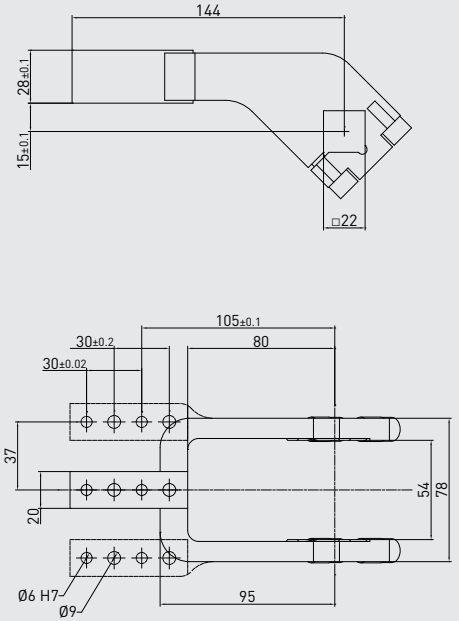

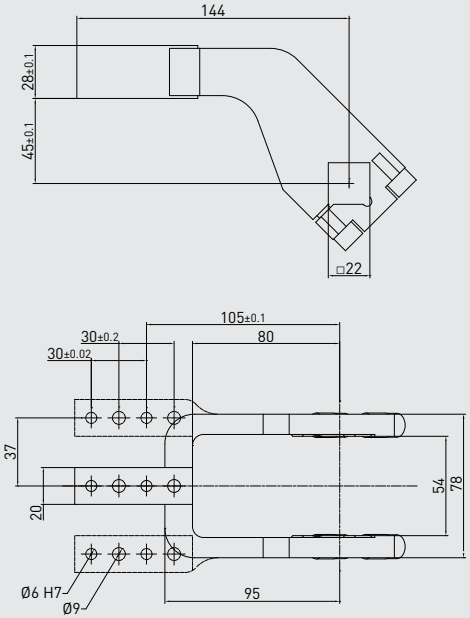

22 mm shaft – 15 mm offset

PART NO.	MATERIAL	VERSION	WEIGHT (kg)	MAX OP. ANGLE POS. 1	MAX OP. ANGLE POS. 2	MAX OP. ANGLE POS. 3	MAX OP. ANGLE POS. 4
B2201	Aluminum	Central	0.52	135°	115°	135°	80°
Q2201	Steel	Central	0.9	135°	115°	135°	80°
B2202	Aluminum	Right	0.54	135°	115°	135°	80°
Q2202	Steel	Right	0.93	135°	115°	135°	80°
B2203	Aluminum	Left	0.54	135°	115°	135°	80°
Q2203	Steel	Left	0.93	135°	115°	135°	80°

Screws: M8x25 **Tightening torque:** 25 N m / 18.43 lb·ft

22 mm shaft – 45 mm offset

PART NO.	MATERIAL	VERSION	WEIGHT (kg)	MAX OP. ANGLE POS. 1	MAX OP. ANGLE POS. 2	MAX OP. ANGLE POS. 3	MAX OP. ANGLE POS. 4
B2204	Aluminum	Central	0.57	135°	135°	135°	75°
Q2204	Steel	Central	0.98	135°	135°	135°	75°
B2205	Aluminum	Right	0.58	135°	135°	135°	75°
Q2205	Steel	Right	1.02	135°	135°	135°	75°
B2206	Aluminum	Left	0.58	135°	135°	135°	75°
Q2206	Steel	Left	1.02	135°	135°	135°	75°

Screws: M8x25 **Tightening torque:** 25 N m / 18.43 lb·ft

Subject to change without notice

FUNCTIONAL CHARTS
SIZE 63 mm

Clamping moment (at 5 bar / 72.5 psi)	390 N m / 287.64 lb·ft
Holding moment	1,500 N m / 1,106.34 lb·ft

The above data are meant for correct working conditions of the clamp – with the same performance level during its life time.

For applications which exceed the above data, please contact our sales representatives.

Air consumption

Air consumption for complete cycle (opening and closing) REV. 00 - 17/06/2015

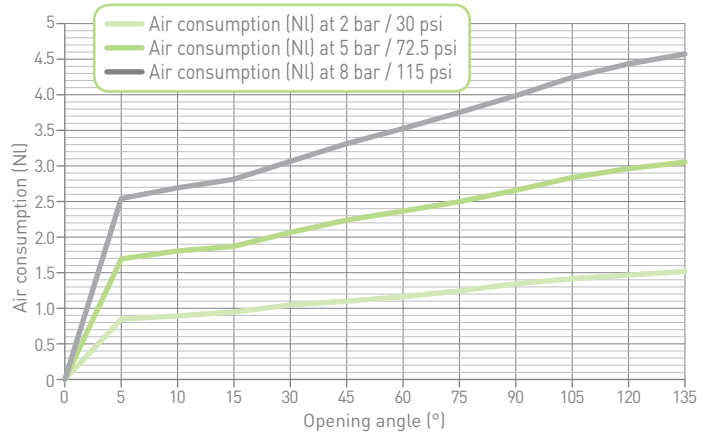

Tooling weight chart

5 bar operating pressure – 135° opening angle REV. 00 - 17/06/2015

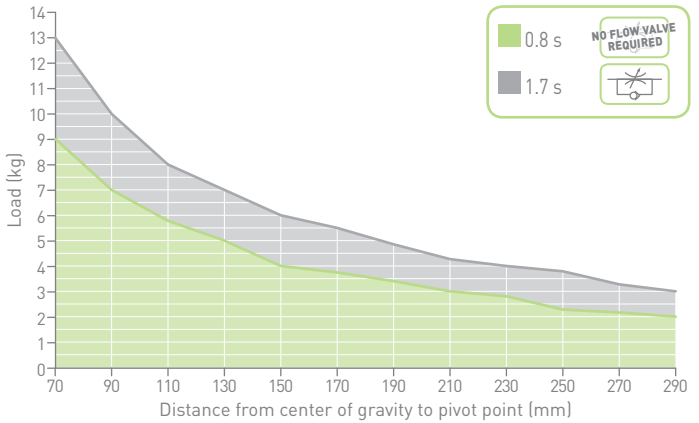

Calculation tool available upon demand

Please consult our technical representatives

Subject to change without notice

C1P80E

Power clamp

European std

80 mm bore

WEIGHT

kg
8.54

* DIMENSIONAL TOLERANCE FOR DOWEL HOLES: ±0.02
DIMENSIONAL TOLERANCE FOR THREADED HOLES: ±0.1

REV. 00 - 31/03/2015

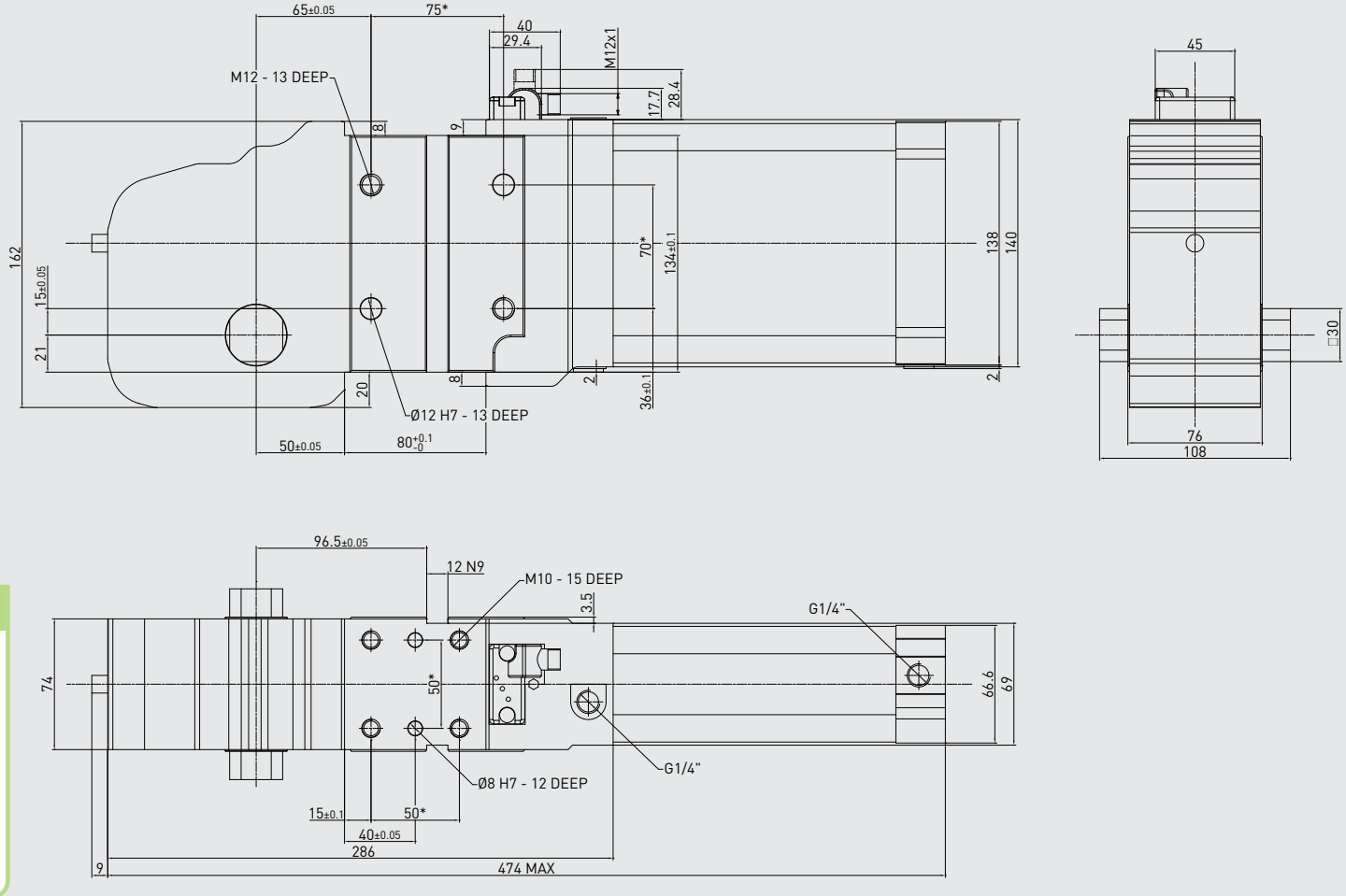

Technical features

Manual release button to open the linkage when air pressure is removed during setup. Pneumatic **ports on both sides** of the cylinder.	
Operating features	
Operating pressure	from 2 to 8 bar / from 30 to 115 psi
Lubrication	all the devices are lubricated for life at the factory. Inline air lubrication isn't required

Subject to change without notice

* DIMENSIONAL TOLERANCE FOR DOWEL HOLES: ±0.02
DIMENSIONAL TOLERANCE FOR THREADED HOLES: ±0.1

REV. 00 - 03/03/2017

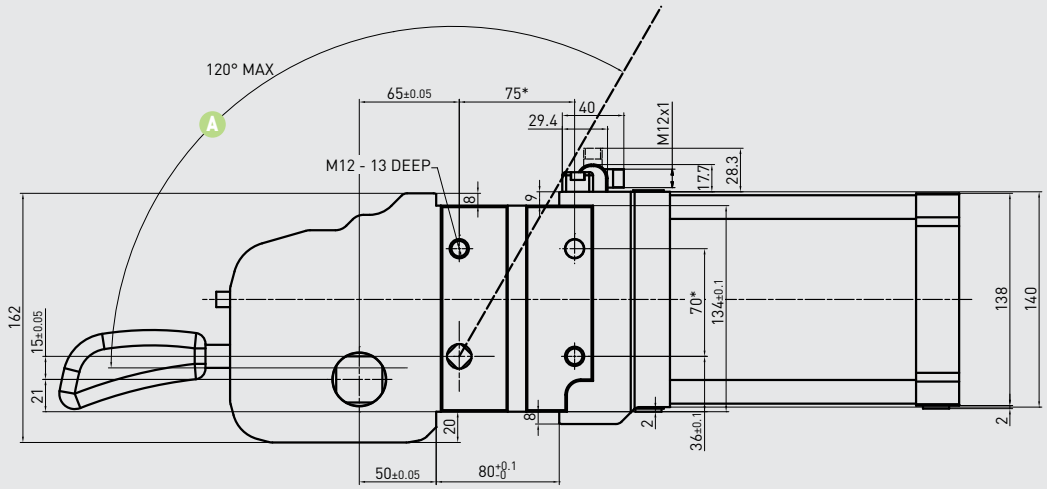

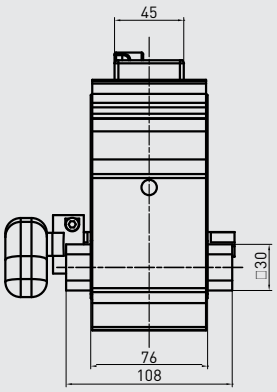

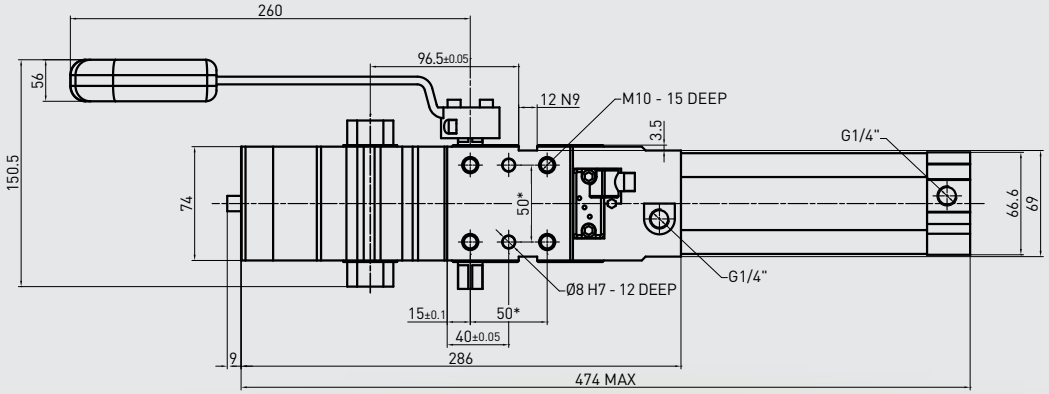

WEIGHT

kg
8.8

C1D280E

Power clamp

European std

80 mm bore

With manual operation

Handle swivel angle

Arm opening angle	Handle swivel angle A
0°	3°
15°	22°
30°	36°
45°	51.3°
60°	68°
75°	84.2°
90°	98°
105°	108°
120°	115°
135°	119°

Subject to change
without notice

CLAMPING ARMS

30 mm shaft

Aluminum

See "Special arm types" under the Accessories section at p. 236

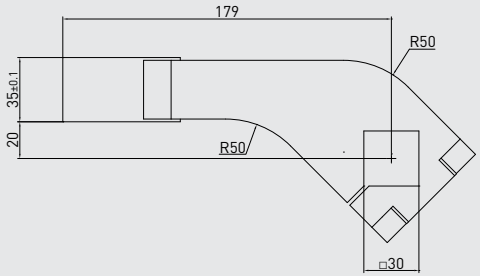

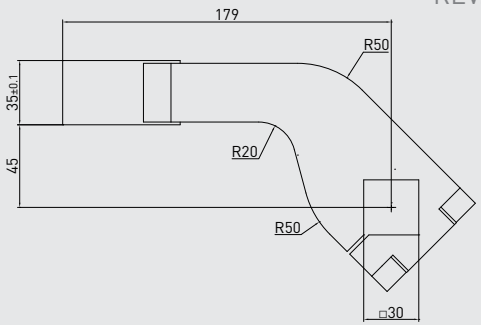

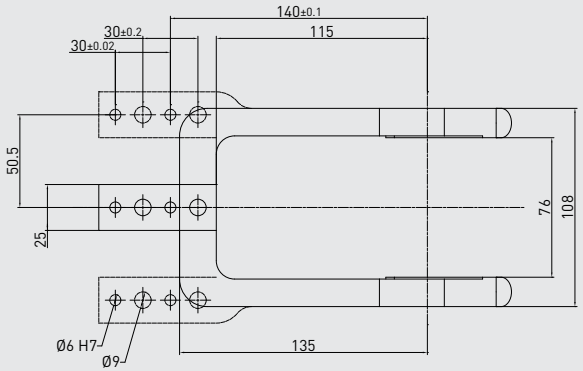

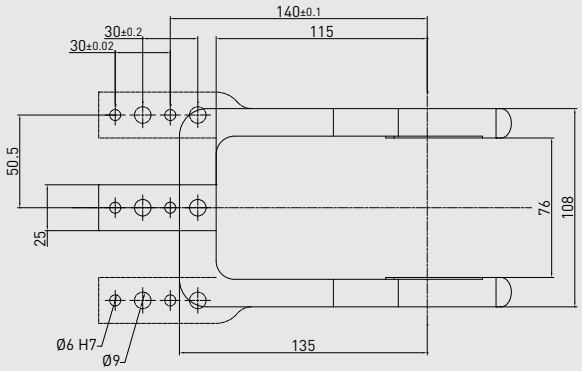

30 mm shaft – 20 mm offset

PART NO.	MATERIAL	VERSION	WEIGHT (kg)	MAX OP. ANGLE POS. 1	MAX OP. ANGLE POS. 2	MAX OP. ANGLE POS. 3	MAX OP. ANGLE POS. 4
B3001	Aluminum	Central	1.1	135°	110°	135°	75°
B3002	Aluminum	Right	1.15	135°	110°	135°	75°
B3003	Aluminum	Left	1.15	135°	110°	135°	75°

Screws: M10x35 **Tightening torque:** 35 N m / 25.81 lb·ft

30 mm shaft – 45 mm offset

PART NO.	MATERIAL	VERSION	WEIGHT (kg)	MAX OP. ANGLE POS. 1	MAX OP. ANGLE POS. 2	MAX OP. ANGLE POS. 3	MAX OP. ANGLE POS. 4
B3004	Aluminum	Central	1.18	135°	110°	135°	75°
B3005	Aluminum	Right	1.2	135°	110°	135°	75°
B3006	Aluminum	Left	1.2	135°	110°	135°	75°

Screws: M10x35 **Tightening torque:** 35 N m / 25.81 lb·ft

Subject to change without notice

FUNCTIONAL CHARTS
SIZE 80 mm

Clamping moment (at 5 bar / 72.5 psi)	850 N m / 626.92 lb·ft
Holding moment	2,500 N m / 1,843.90 lb·ft

The above data are meant for correct working conditions of the clamp – with the same performance level during its life time.

For applications which exceed the above data, please contact our sales representatives.

Air consumption

Air consumption for complete cycle (opening and closing) REV. 00 - 29/05/2015

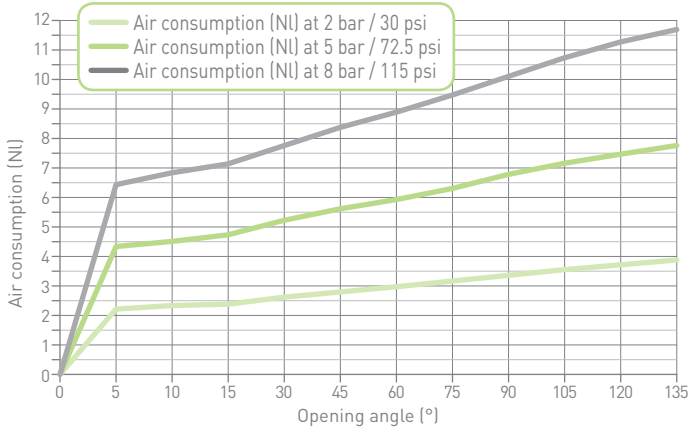

Tooling weight chart

5 bar operating pressure – 135° opening angle REV. 00 - 29/05/2015

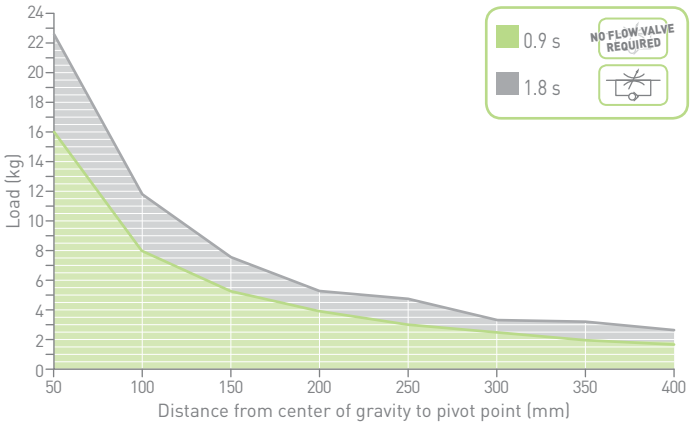

Calculation tool available upon demand

Please consult our technical representatives

Subject to change without notice

ORDERING STRING
C2-SERIES

GLOBAL STANDARD COMPONENTS NAAMS

C | 2 | P | 50 | E | N | L

VERSION
C = clamp

MOUNTING PATTERN STANDARD
2 = NAAMS mount

OPERATION
P = pneumatic
D = pneumatic with manual operation
D0 = output shaft for manual operation - no lever and no handle included

2 =

SIZE
50 = Ø 50 mm
63 = Ø 63 mm
80 = Ø 80 mm

SENSOR
E = electronic sensor with M12 swivel connector - PNP
A = electronic sensor with M12 swivel connector - NPN
N = no sensor
B = electronic sensor with M8 swivel connector - PNP

PORTS
G = GAS
N = NPT
D = dual GAS ports on rear end cap
A = dual NPT ports on rear end cap

SHAFT OUTPUT
_ = dual output
L = single output - LEFT
R = single output - RIGHT

NAAMS clamping arms to be ordered separately

Please see the charts in the datasheets for arm position as well as for max. opening angle

Subject to change without notice

* DIMENSIONAL TOLERANCE FOR DOWEL HOLES: ±0.02
DIMENSIONAL TOLERANCE FOR THREADED HOLES: ±0.1
NAAMS DIMENSIONAL VALUES ARE HIGHLIGHTED

REV. 01 - 15/05/2016

WEIGHT

kg 2.7

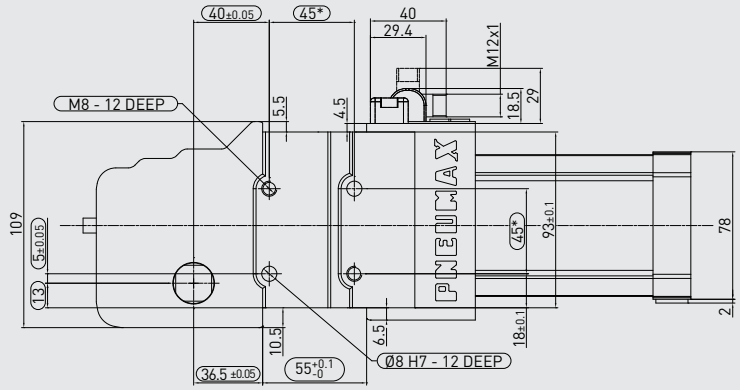

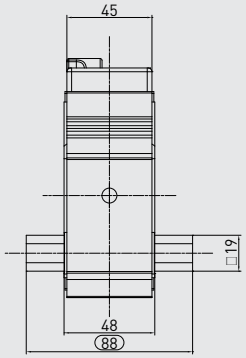

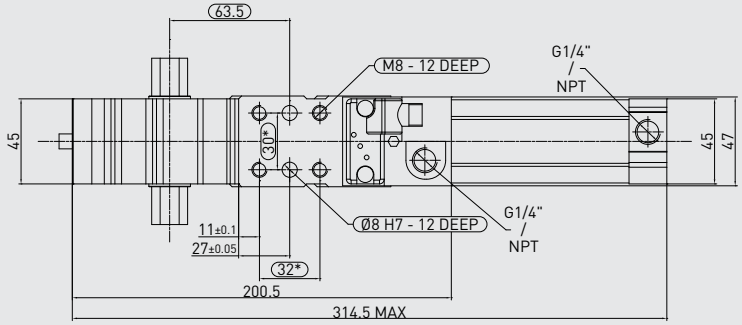

GLOBAL STANDARDS COMPONENTS
NAAMS

C2P50E

Power clamp

NAAMS std

50 mm bore

Technical features

Manual release button to open the linkage when air pressure is removed during setup. Pneumatic **ports on both sides** of the cylinder.	
Operating features	
Operating pressure	from 2 to 8 bar / from 30 to 115 psi
Lubrication	all the devices are lubricated for life at the factory. Inline air lubrication isn't required

Subject to change without notice

WEIGHT

kg 3.17

D2 handle included

* DIMENSIONAL TOLERANCE FOR DOWEL HOLES: ±0.02
DIMENSIONAL TOLERANCE FOR THREADED HOLES: ±0.1
NAAMS DIMENSIONAL VALUES ARE HIGHLIGHTED

REV. 01 - 15/05/2016

GLOBAL STANDARD COMPONENTS NAAMS

C2D250E

Power clamp

NAAMS std

50 mm bore

With manual operation

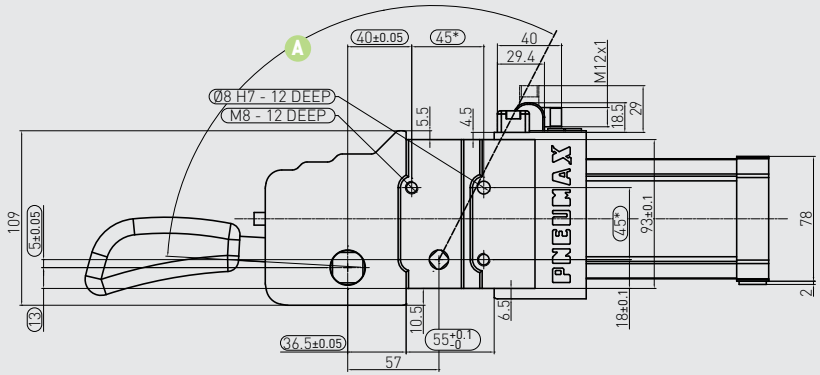

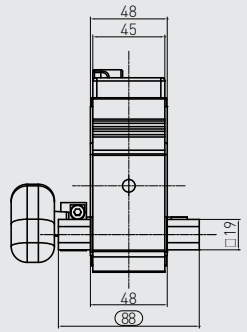

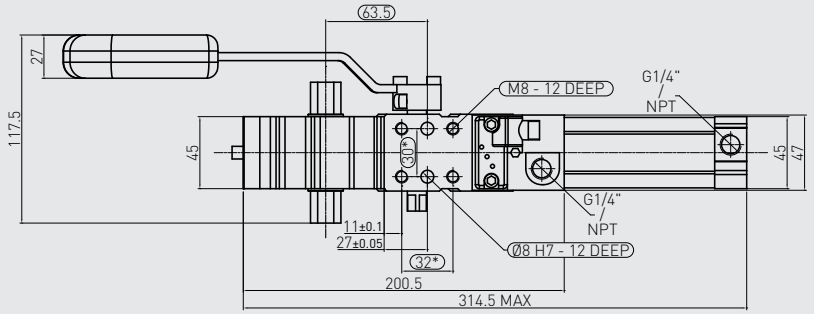

Handle swivel angle

Arm opening angle	Handle swivel angle A
0°	3.25°
15°	27°
30°	43°
45°	59.3°
60°	75.4°
75°	89.75°
90°	101°
105°	109°
120°	114.25°
135°	117.2°

Subject to change without notice

REV. 02 - 16/01/2018

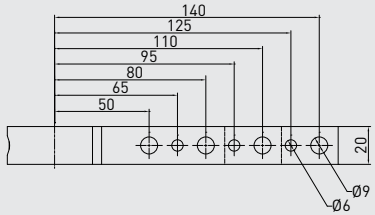

19 mm shaft – 0 mm offset

PART NO.	MATERIAL	LENGTH	WEIGHT (kg)	MAX OP. ANGLE POS. 1	MAX OP. ANGLE POS. 2	MAX OP. ANGLE POS. 3	MAX OP. ANGLE POS. 4
QNACA236M	Steel	90	0.4	135°	135°	135°	135°
QNACA237M	Steel	120	0.49	135°	135°	135°	135°
QNACA238M	Steel	150	0.58	135°	135°	135°	135°

Screws: M6x25 **Tightening torque:** 10 N m / 7.37 lb·ft

19 mm shaft – 25 mm offset

PART NO.	MATERIAL	LENGTH	WEIGHT (kg)	MAX OP. ANGLE POS. 1	MAX OP. ANGLE POS. 2	MAX OP. ANGLE POS. 3	MAX OP. ANGLE POS. 4
QNACA246M	Steel	90	0.44	135°	135°	135°	135°
QNACA247M	Steel	120	0.52	135°	135°	135°	135°
QNACA248M	Steel	150	0.6	135°	135°	135°	135°

Screws: M6x25 **Tightening torque:** 10 N m / 7.37 lb·ft

19 mm shaft – 50 mm offset

PART NO.	MATERIAL	LENGTH	WEIGHT (kg)	MAX OP. ANGLE POS. 1	MAX OP. ANGLE POS. 2	MAX OP. ANGLE POS. 3	MAX OP. ANGLE POS. 4
QNACA256M	Steel	90	0.52	135°	135°	135°	135°
QNACA257M	Steel	120	0.6	135°	135°	135°	135°
QNACA258M	Steel	150	0.68	135°	135°	135°	135°

Screws: M6x25 **Tightening torque:** 10 N m / 7.37 lb·ft

0 mm OFFSET

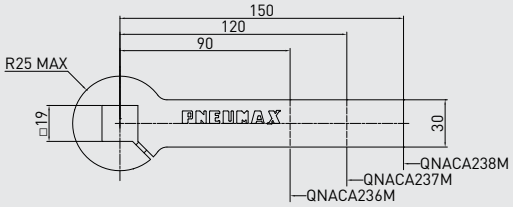

25 mm OFFSET

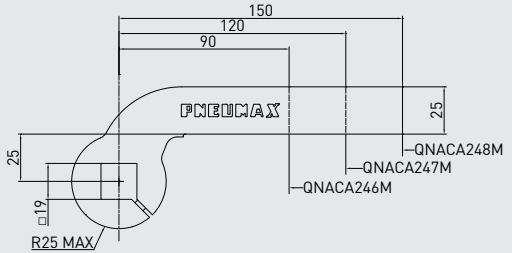

50 mm OFFSET

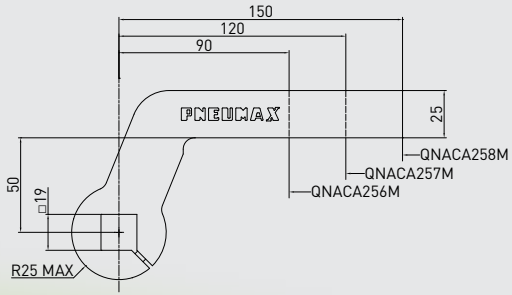

CLAMPING ARMS

19 mm shaft

Steel

Subject to change without notice

FUNCTIONAL CHARTS
SIZE 50 mm

Clamping moment (at 5 bar / 72.5 psi)	185 N m / 136.44 lb·ft
Holding moment	800 N m / 590.04 lb·ft

The above data are meant for correct working conditions of the clamp – with the same performance level during its life time.

For applications which exceed the above data, please contact our sales representatives.

Air consumption

Air consumption for complete cycle (opening and closing) REV. 00 - 17/06/2015

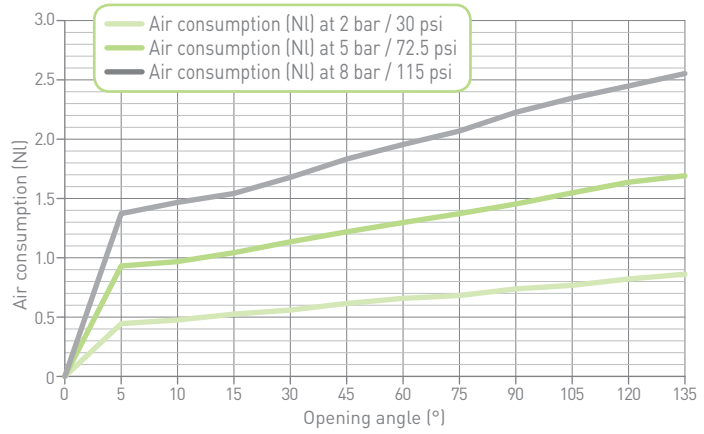

Tooling weight chart

5 bar operating pressure – 135° opening angle REV. 00 - 17/06/2015

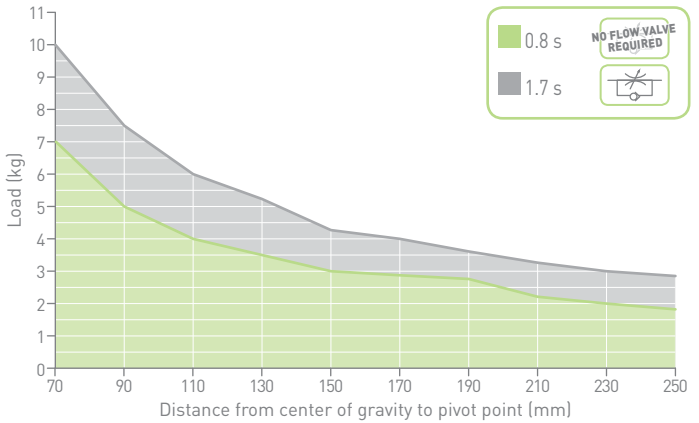

Calculation tool available upon demand

Please consult our technical representatives

Subject to change without notice

* DIMENSIONAL TOLERANCE FOR DOWEL HOLES: ±0.02
DIMENSIONAL TOLERANCE FOR THREADED HOLES: ±0.1
NAAMS DIMENSIONAL VALUES ARE HIGHLIGHTED

REV. 00 - 31/03/2015

WEIGHT

kg 3.5

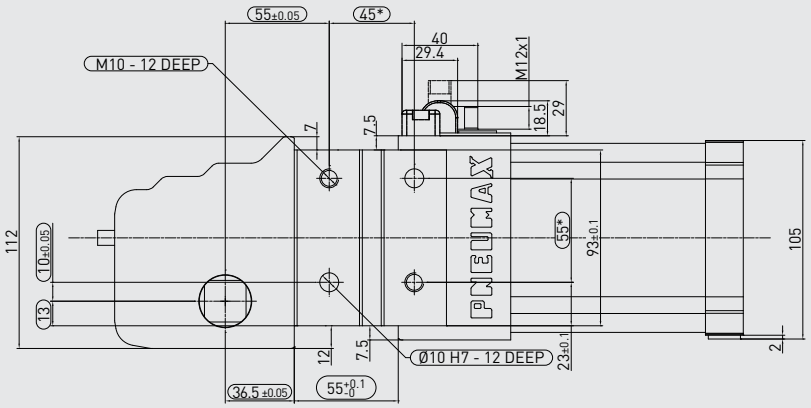

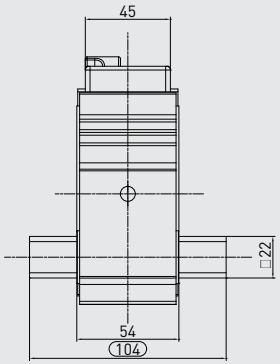

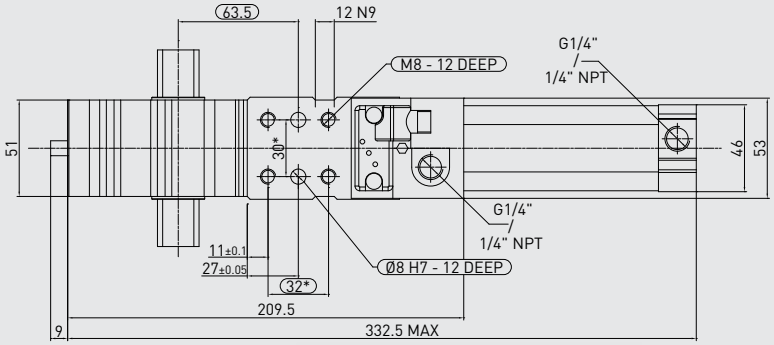

GLOBAL STANDARDS COMPONENTS
NAAMS

C2P63E

Power clamp

NAAMS std

63 mm bore

Technical features

Manual release button to open the linkage when air pressure is removed during setup. Pneumatic **ports on both sides** of the cylinder.	
Operating features	
Operating pressure	from 2 to 8 bar / from 30 to 115 psi
Lubrication	all the devices are lubricated for life at the factory. Inline air lubrication isn't required

Subject to change without notice

WEIGHT

kg 4

D2 handle included

* DIMENSIONAL TOLERANCE FOR DOWEL HOLES: ±0.02
DIMENSIONAL TOLERANCE FOR THREADED HOLES: ±0.1
NAAMS DIMENSIONAL VALUES ARE HIGHLIGHTED

REV. 00 - 17/06/2015

GLOBAL STANDARD COMPONENTS NAAMS

C2D263E

Power clamp

NAAMS std

63 mm bore

With manual operation

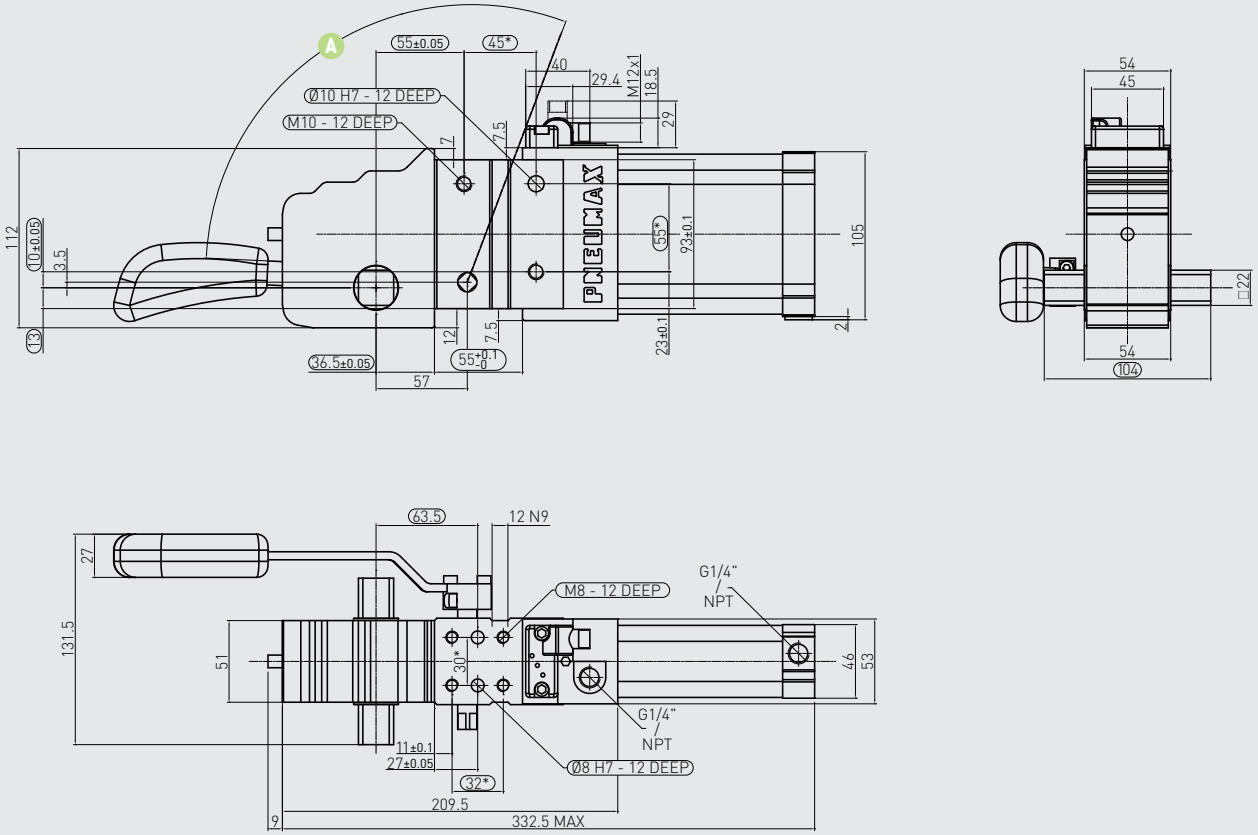

Handle swivel angle

Arm opening angle	Handle swivel angle A
0°	2.65°
15°	26.35°
30°	41.38°
45°	56°
60°	70.38°
75°	83.43°
90°	94°
105°	102°
120°	107°
135°	110.7°

Subject to change without notice

REV. 01 - 31/07/2015

0 mm OFFSET

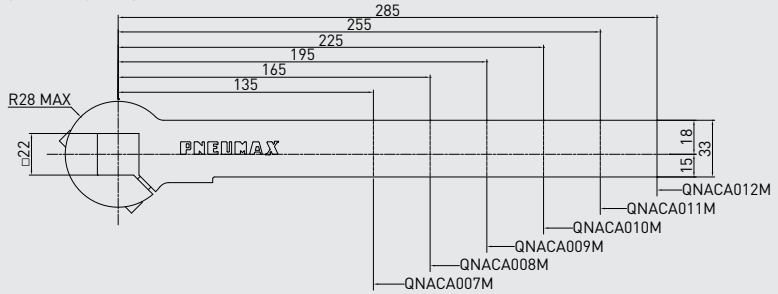

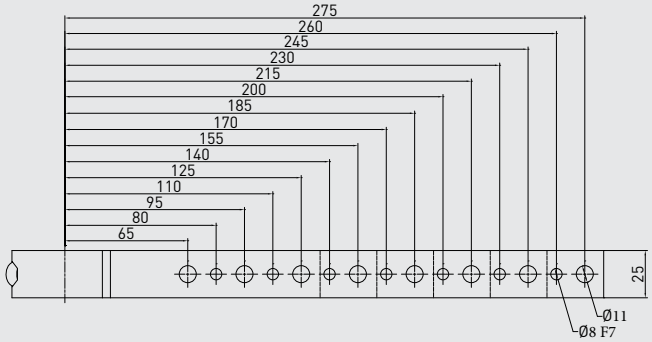

25 mm OFFSET

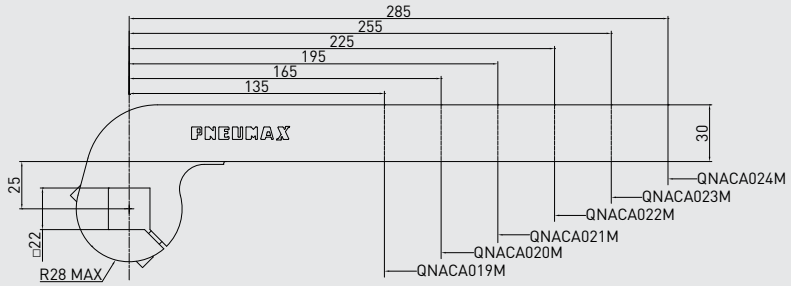

GLOBAL STANDARD COMPONENTS NAAMS

CLAMPING ARMS

22 mm shaft

Steel

22 mm shaft – 0 mm offset

PART NO.	MATERIAL	LENGTH	WEIGHT (kg)	MAX OP. ANGLE POS. 1	MAX OP. ANGLE POS. 2	MAX OP. ANGLE POS. 3	MAX OP. ANGLE POS. 4
QNACA007M	Steel	135	0.72	135°	135°	135°	135°
QNACA008M	Steel	165	0.83	135°	135°	135°	135°
QNACA009M	Steel	195	0.94	135°	135°	135°	135°
QNACA010M	Steel	225	1.05	135°	135°	135°	135°
QNACA011M	Steel	255	1.16	135°	135°	135°	135°
QNACA012M	Steel	285	1.28	135°	135°	135°	135°

Screws: M8x18 **Tightening torque:** 25 N m / 18.43 lb·ft

22 mm shaft – 25 mm offset

PART NO.	MATERIAL	LENGTH	WEIGHT (kg)	MAX OP. ANGLE POS. 1	MAX OP. ANGLE POS. 2	MAX OP. ANGLE POS. 3	MAX OP. ANGLE POS. 4
QNACA019M	Steel	135	0.84	135°	135°	135°	135°
QNACA020M	Steel	165	0.95	135°	135°	135°	135°
QNACA021M	Steel	195	1.05	135°	135°	135°	135°
QNACA022M	Steel	225	1.16	135°	135°	135°	135°
QNACA023M	Steel	255	1.26	135°	135°	135°	135°
QNACA024M	Steel	285	1.37	135°	135°	135°	135°

Screws: M8x18 **Tightening torque:** 25 N m / 18.43 lb·ft

Subject to change without notice

GLOBAL STANDARD COMPONENTS
NAAMS

CLAMPING ARMS

22 mm shaft

Steel

70 mm OFFSET

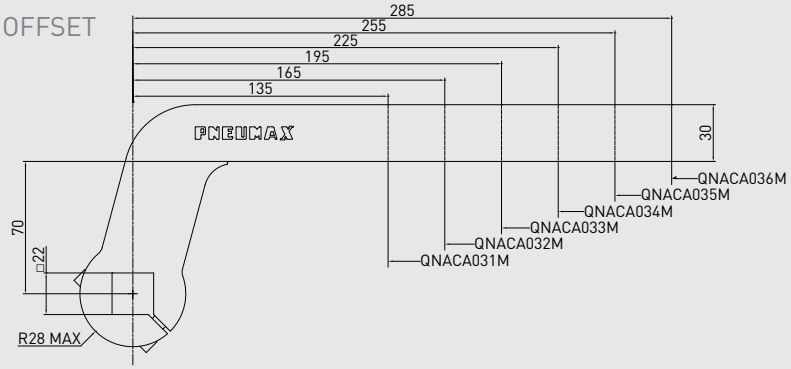

120 mm OFFSET

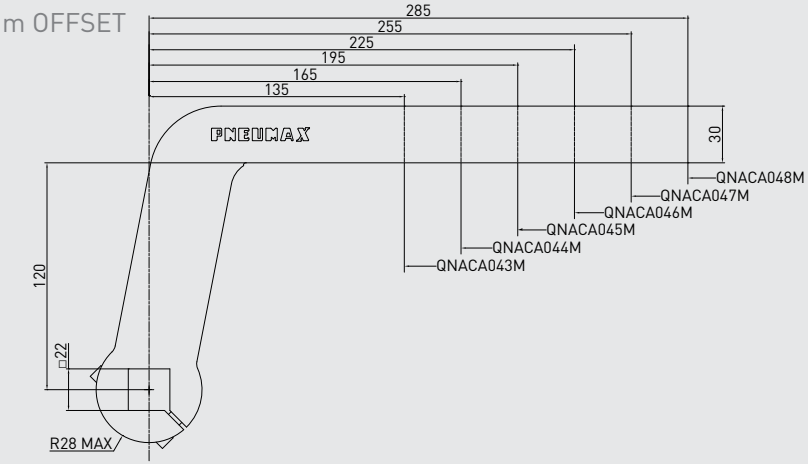

REV. 00 - 31/03/2015

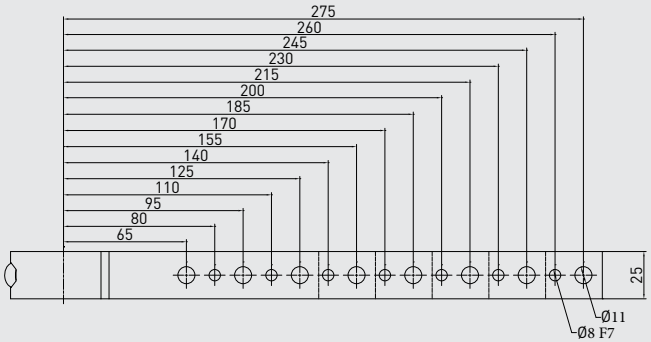

22 mm shaft – 70 mm offset

PART NO.	MATERIAL	LENGTH	WEIGHT (kg)	MAX OP. ANGLE POS. 1	MAX OP. ANGLE POS. 2	MAX OP. ANGLE POS. 3	MAX OP. ANGLE POS. 4
QNACA031M	Steel	135	1.05	135°	135°	135°	135°
QNACA032M	Steel	165	1.16	135°	135°	135°	135°
QNACA033M	Steel	195	1.27	135°	135°	135°	135°
QNACA034M	Steel	225	1.38	135°	135°	135°	135°
QNACA035M	Steel	255	1.49	135°	135°	135°	135°
QNACA036M	Steel	285	1.6	135°	135°	135°	135°

Screws: M8x18 **Tightening torque:** 25 N m / 18.43 lb·ft

22 mm shaft – 120 mm offset

PART NO.	MATERIAL	LENGTH	WEIGHT (kg)	MAX OP. ANGLE POS. 1	MAX OP. ANGLE POS. 2	MAX OP. ANGLE POS. 3	MAX OP. ANGLE POS. 4
QNACA043M	Steel	135	1.27	135°	135°	135°	135°
QNACA044M	Steel	165	1.37	135°	135°	135°	135°
QNACA045M	Steel	195	1.48	135°	135°	135°	135°
QNACA046M	Steel	225	1.58	135°	135°	135°	135°
QNACA047M	Steel	255	1.69	135°	135°	135°	135°
QNACA048M	Steel	285	1.8	135°	135°	135°	135°

Screws: M8x18 **Tightening torque:** 25 N m / 18.43 lb·ft

Subject to change without notice

FUNCTIONAL CHARTS
SIZE 63 mm

Clamping moment (at 5 bar / 72.5 psi)	390 N m / 287.64 lb·ft
Holding moment	1,500 N m / 1,106.34 lb·ft

The above data are meant for correct working conditions of the clamp – with the same performance level during its life time.

For applications which exceed the above data, please contact our sales representatives.

Air consumption
Air consumption for complete cycle (opening and closing) REV. 00 - 17/06/2015

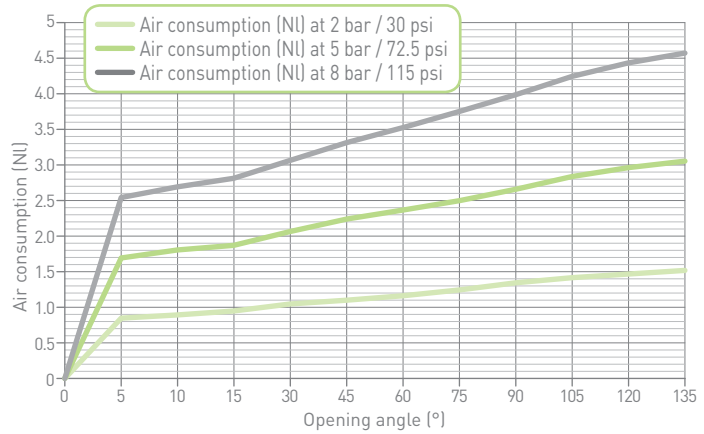

Tooling weight chart
5 bar operating pressure – 135° opening angle REV. 00 - 17/06/2015

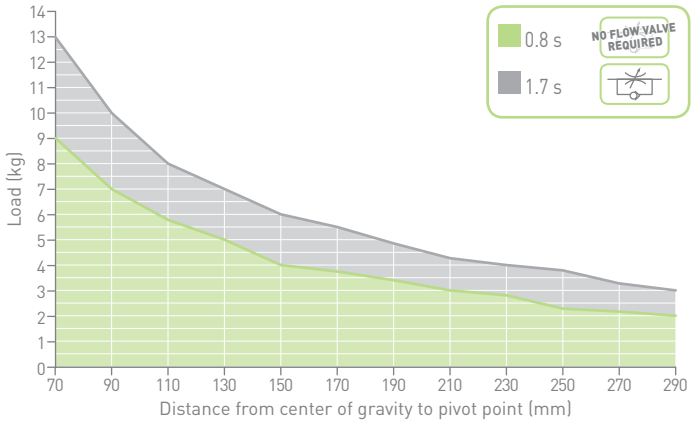

Calculation tool available upon demand

Please consult our technical representatives

Subject to change without notice

NAAMS

C2P80E

Power clamp

NAAMS std

80 mm bore

WEIGHT

kg 8.75

* DIMENSIONAL TOLERANCE FOR DOWEL HOLES: ±0.02
DIMENSIONAL TOLERANCE FOR THREADED HOLES: ±0.1
NAAMS DIMENSIONAL VALUES ARE HIGHLIGHTED

REV. 01 - 31/07/2015

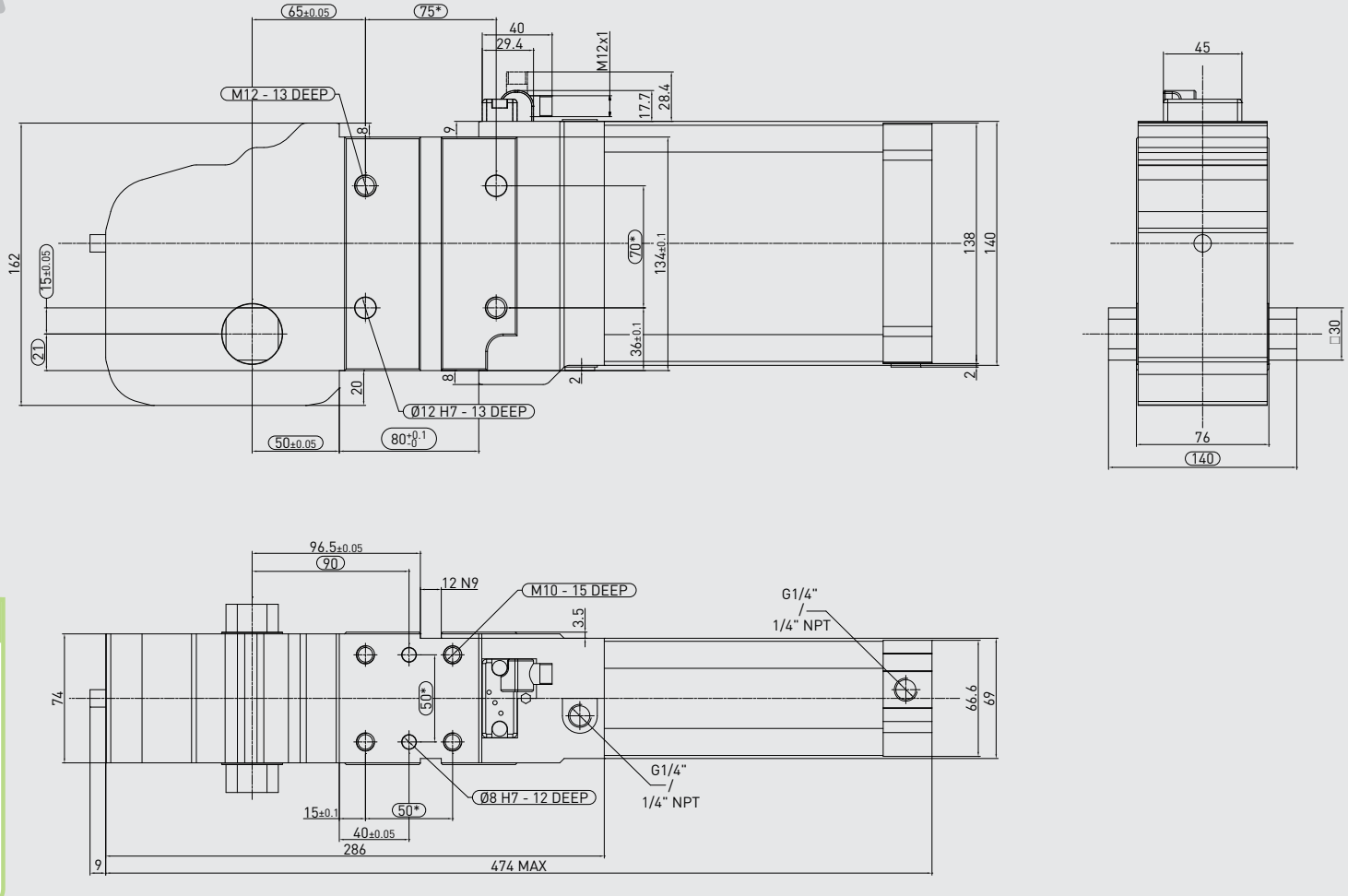

Technical features

Manual release button to open the linkage when air pressure is removed during setup. Pneumatic **ports on both sides** of the cylinder.	
Operating features	
Operating pressure	from 2 to 8 bar / from 30 to 115 psi
Lubrication	all the devices are lubricated for life at the factory. Inline air lubrication isn't required

Subject to change without notice

REV. 00 - 31/03/2015

CLAMPING ARMS

30 mm shaft

Steel

0 mm OFFSET

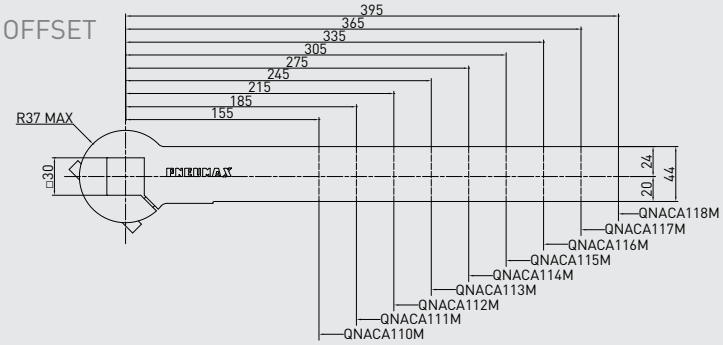

25 mm OFFSET

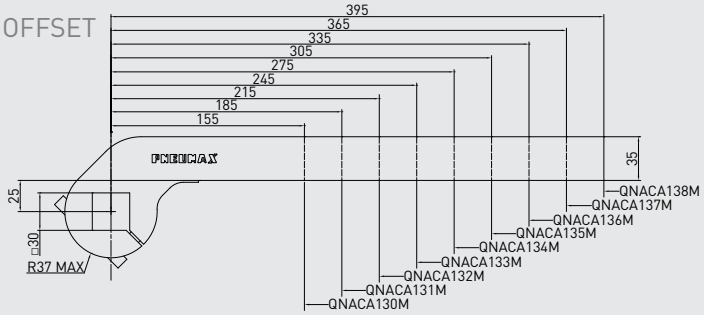

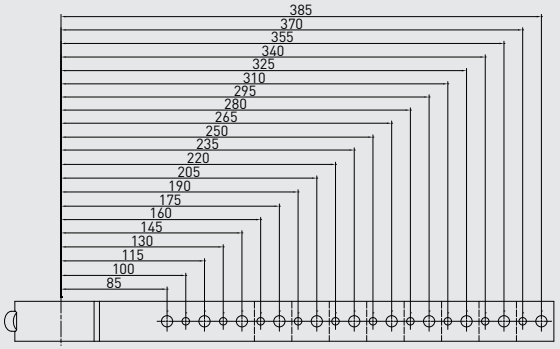

30 mm shaft – 0 mm offset

PART NO.	MATERIAL	LENGTH	WEIGHT (kg)	MAX OP. ANGLE POS. 1	MAX OP. ANGLE POS. 2	MAX OP. ANGLE POS. 3	MAX OP. ANGLE POS. 4
QNACA110M	Steel	155	1.41	135°	135°	135°	135°
QNACA111M	Steel	185	1.58	135°	135°	135°	135°
QNACA112M	Steel	215	1.76	135°	135°	135°	135°
QNACA113M	Steel	245	1.93	135°	135°	135°	135°
QNACA114M	Steel	275	2.1	135°	135°	135°	135°
QNACA115M	Steel	305	2.27	135°	135°	135°	135°
QNACA116M	Steel	335	2.45	135°	135°	135°	135°
QNACA117M	Steel	365	2.62	135°	135°	135°	135°
QNACA118M	Steel	395	2.8	135°	135°	135°	135°

Screws: M10x20 **Tightening torque:** 50 N m / 36.87 lb·ft

30 mm shaft – 25 mm offset

PART NO.	MATERIAL	LENGTH	WEIGHT (kg)	MAX OP. ANGLE POS. 1	MAX OP. ANGLE POS. 2	MAX OP. ANGLE POS. 3	MAX OP. ANGLE POS. 4
QNACA130M	Steel	155	1.24	135°	135°	135°	135°
QNACA131M	Steel	185	1.39	135°	135°	135°	135°
QNACA132M	Steel	215	1.54	135°	135°	135°	135°
QNACA133M	Steel	245	1.69	135°	135°	135°	135°
QNACA134M	Steel	275	1.84	135°	135°	135°	135°
QNACA135M	Steel	305	2	135°	135°	135°	135°
QNACA136M	Steel	335	2.14	135°	135°	135°	135°
QNACA137M	Steel	365	2.29	135°	135°	135°	135°
QNACA138M	Steel	395	2.45	135°	135°	135°	135°

Screws: M10x20 **Tightening torque:** 50 N m / 36.87 lb·ft

Subject to change without notice

CLAMPING ARMS

30 mm shaft

Steel

REV. 00 - 31/03/2015

70 mm OFFSET

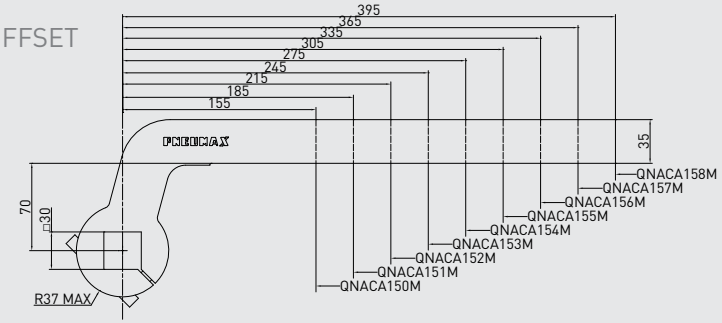

120 mm OFFSET

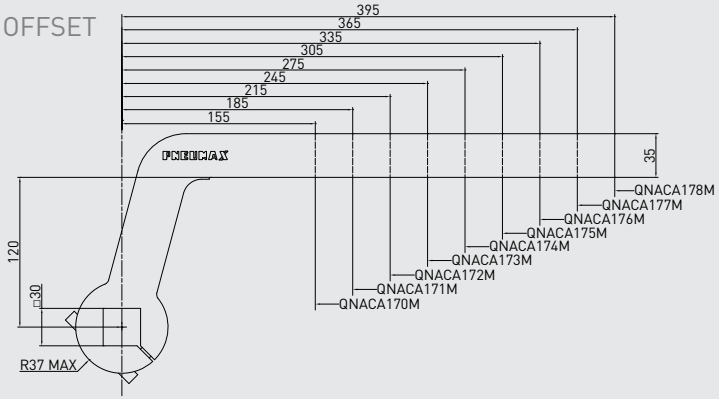

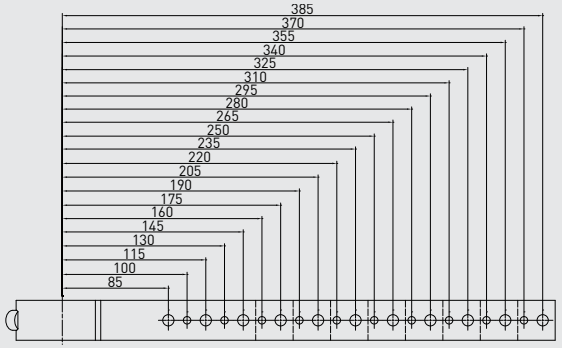

30 mm shaft – 70 mm offset

PART NO.	MATERIAL	LENGTH	WEIGHT (kg)	MAX OP. ANGLE POS. 1	MAX OP. ANGLE POS. 2	MAX OP. ANGLE POS. 3	MAX OP. ANGLE POS. 4
QNACA150M	Steel	155	1.7	135°	135°	135°	135°
QNACA151M	Steel	185	1.85	135°	135°	135°	135°
QNACA152M	Steel	215	2	135°	135°	135°	135°
QNACA153M	Steel	245	2.15	135°	135°	135°	135°
QNACA154M	Steel	275	2.3	135°	135°	135°	135°
QNACA155M	Steel	305	2.45	135°	135°	135°	135°
QNACA156M	Steel	335	2.6	135°	135°	135°	135°
QNACA157M	Steel	365	2.76	135°	135°	135°	135°
QNACA158M	Steel	395	2.92	135°	135°	135°	135°

Screws: M10x20 **Tightening torque:** 50 N m / 36.87 lb·ft

30 mm shaft – 120 mm offset

PART NO.	MATERIAL	LENGTH	WEIGHT (kg)	MAX OP. ANGLE POS. 1	MAX OP. ANGLE POS. 2	MAX OP. ANGLE POS. 3	MAX OP. ANGLE POS. 4
QNACA170M	Steel	155	1.97	135°	135°	135°	135°
QNACA171M	Steel	185	2.12	135°	135°	135°	135°
QNACA172M	Steel	215	2.27	135°	135°	135°	135°
QNACA173M	Steel	245	2.42	135°	135°	135°	135°
QNACA174M	Steel	275	2.57	135°	135°	135°	135°
QNACA175M	Steel	305	2.72	135°	135°	135°	135°
QNACA176M	Steel	335	2.87	135°	135°	135°	135°
QNACA177M	Steel	365	3.02	135°	135°	135°	135°
QNACA178M	Steel	395	3.19	135°	135°	135°	135°

Screws: M10x20 **Tightening torque:** 50 N m / 36.87 lb·ft

Subject to change without notice

FUNCTIONAL CHARTS
SIZE 80 mm

Clamping moment (at 5 bar / 72.5 psi)	850 N m / 626.92 lb·ft
Holding moment	2,500 N m / 1,843.90 lb·ft

The above data are meant for correct working conditions of the clamp – with the same performance level during its life time.

For applications which exceed the above data, please contact our sales representatives.

Air consumption
Air consumption for complete cycle (opening and closing) REV. 00 - 31/03/2015

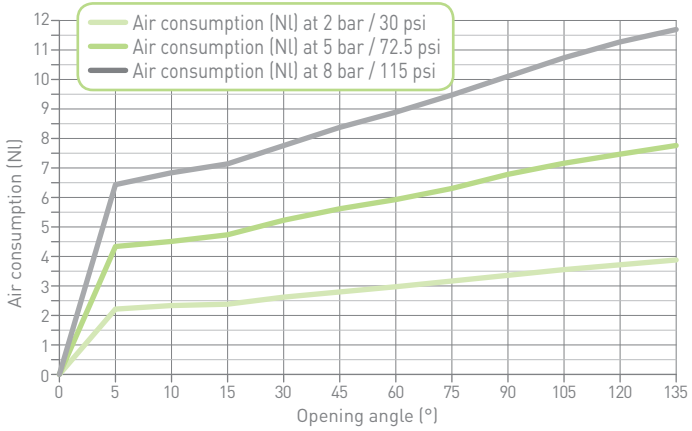

Tooling weight chart
5 bar operating pressure – 135° opening angle REV. 00 - 31/03/2015

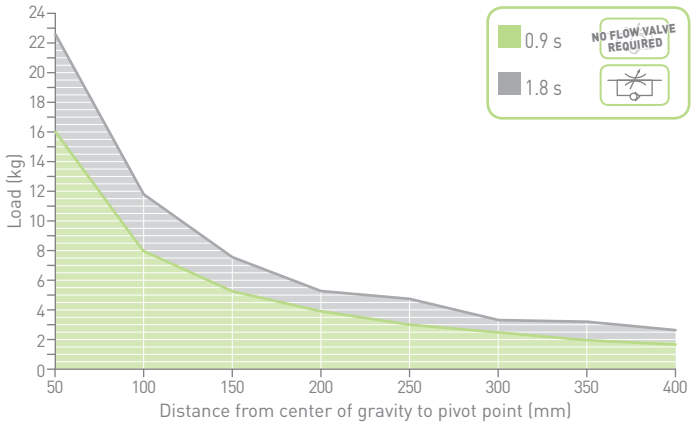

Calculation tool available upon demand

Please consult our technical representatives

Subject to change without notice

WHY PNX

CLAMPS WITH INTEGRATED DEVICE FOR DOUBLE WORKPIECE IDENTIFICATION

For critical applications, where it is required to identify the unwilling presence of two metal sheets in the process and to avoid their clamping

Available for

- ✔ C standard clamps
- ✔ HE High Efficiency clamps
- ✔ C2 NAAMS clamps

PATENT PENDING

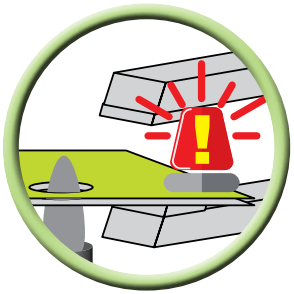

WHY PNX

INTEGRATED SOLUTION

This built-in device allows a reliable double workpiece identification

✔ Simple, single-touch adjustment with external access.

C1X40
50
63

C2X50
63

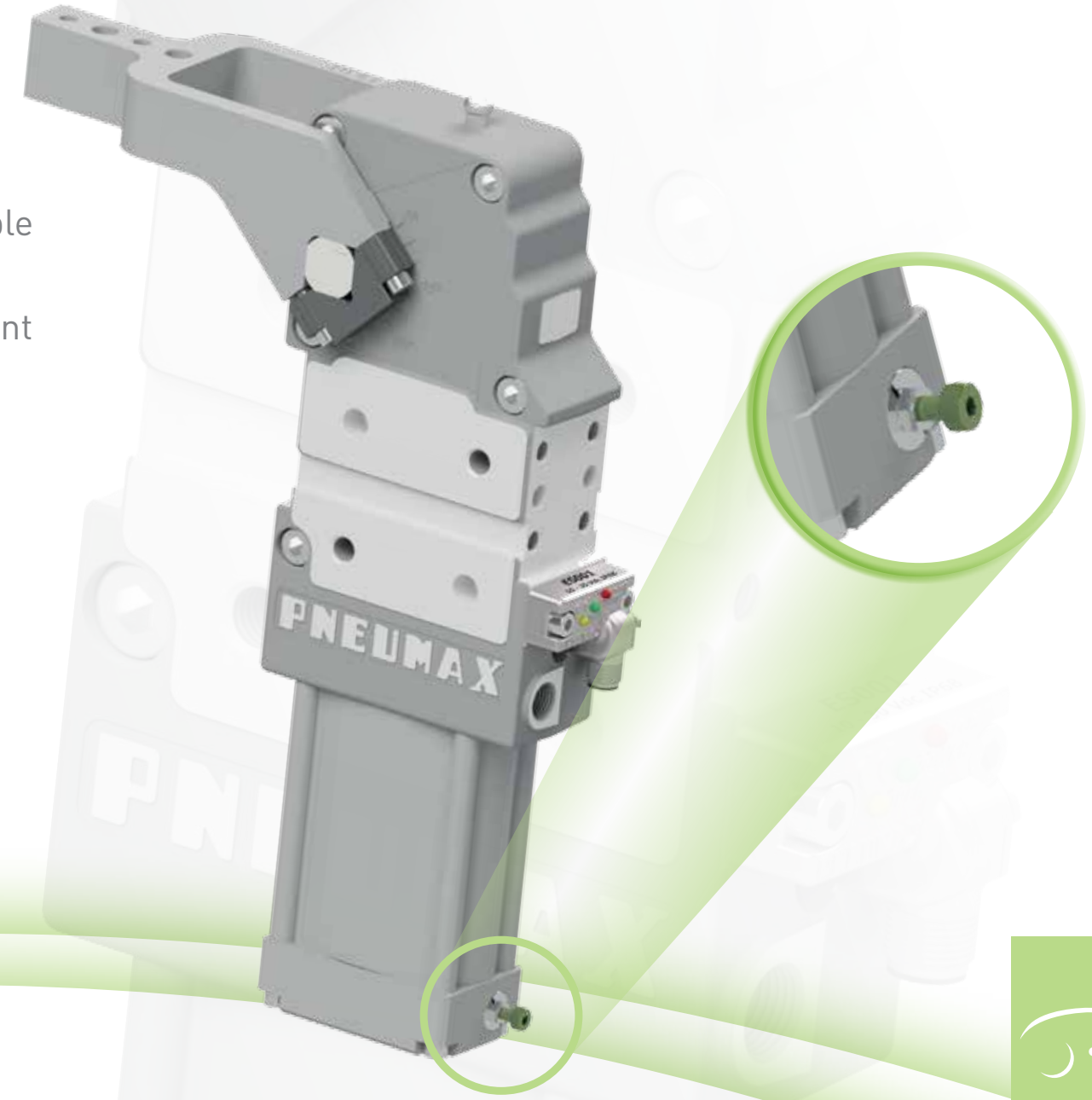

For further information, please get in touch with our technical dept. at **automotive@pneumaxspa.com**

WHY PNX

DOUBLE WORKPIECE IDENTIFICATION AS ACCESSORY

- **ADWI14** suitable for sizes 50-63 mm bore
- **ADWI18** suitable for sizes 25-32-40 mm bore including HE1P0 and HE1P1

PATENT PENDING

ORDERING STRING C_X-SERIES

C	1	X	40	E	G	1	A	01

VERSION
C = clamp

MOUNTING PATTERN STANDARD
1 = European mount
2 = NAAMS mount

OPERATION
X = double workpiece identification

SIZE
40 = Ø 40 mm
50 = Ø 50 mm
63 = Ø 63 mm

SENSOR
E = electronic sensor with M12 swivel connector - PNP
A = electronic sensor with M12 swivel connector - NPN
N = no sensor
B = electronic sensor with M8 swivel connector - PNP

PORTS
G = GAS
N = NPT
D = dual GAS ports on rear end cap
A = dual NPT ports on rear end cap

ARM MOUNT
1 =
2 =
3 =
4 =

ARM MATERIAL
A = aluminum
S = steel

NAAMS arms to be ordered separately

CLAMP ARM TYPE
01 = wishbone, central, 15 mm offset, Ø 6H7*
02 = wishbone, right, 15 mm offset, Ø 6H7*
03 = wishbone, left, 15 mm offset, Ø 6H7*
04 = wishbone, central, 45 mm offset, Ø 6H7
05 = wishbone, right, 45 mm offset, Ø 6H7
06 = wishbone, left, 45 mm offset, Ø 6H7

Please see the charts in the datasheets for arm position as well as for max. opening angle

*for size 80 mm > 20 mm offset

Subject to change without notice

C1XP40E

Clamp with double
workpiece identification
European std
40 mm bore

* DIMENSIONAL TOLERANCE FOR DOWEL HOLES: ±0.02
DIMENSIONAL TOLERANCE FOR THREADED HOLES: ±0.1

REV. 00 - 20/08/2018

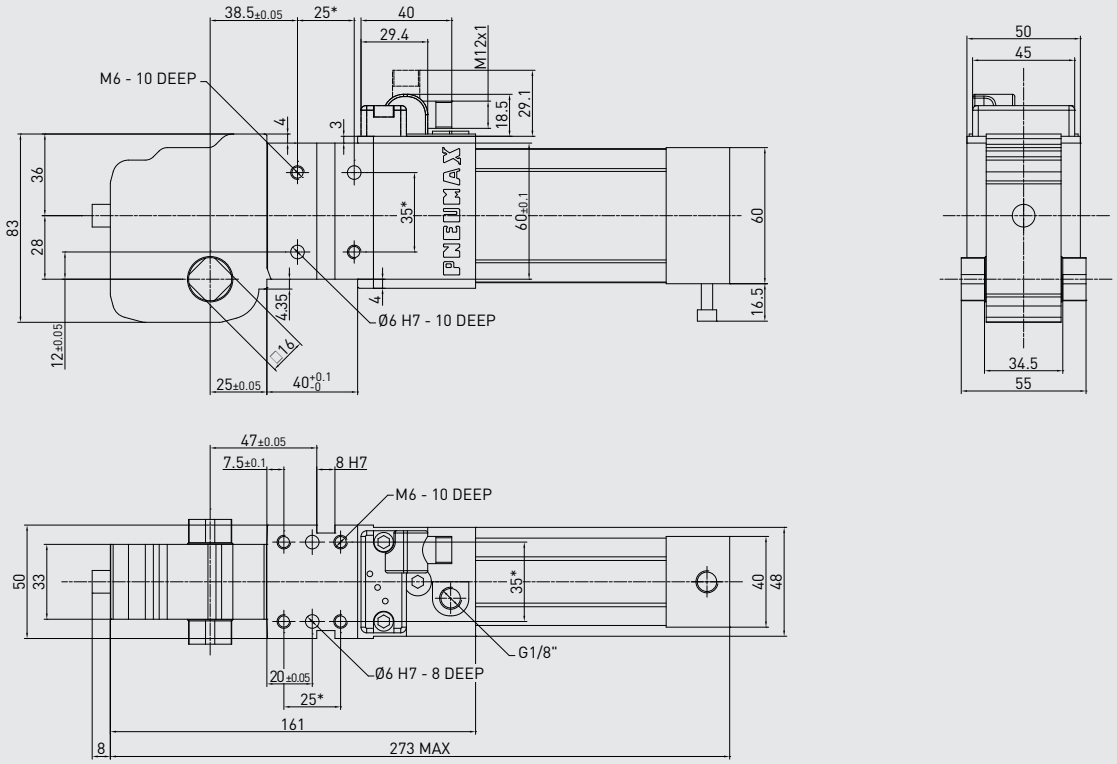

Technical features

Manual release button to open the linkage when air pressure is removed during setup. Pneumatic **ports on both sides** of the cylinder.	
Operating features	
Operating pressure	from 2 to 8 bar / from 30 to 115 psi
Lubrication	all the devices are lubricated for life at the factory. Inline air lubrication isn't required

Subject to change
without notice

* DIMENSIONAL TOLERANCE FOR DOWEL HOLES: ±0.02
DIMENSIONAL TOLERANCE FOR THREADED HOLES: ±0.1

REV. 00 - 20/08/2018

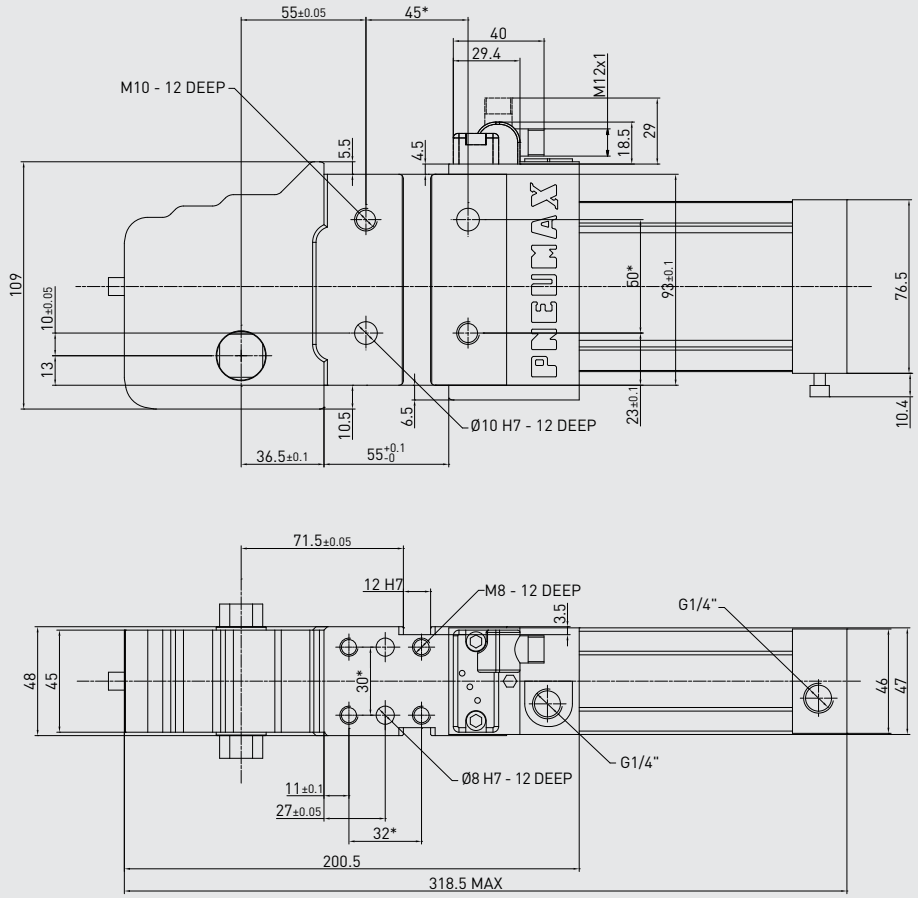

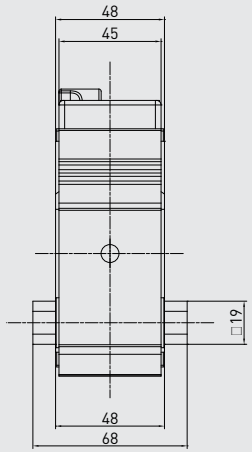

C1XP50E

Clamp with double
workpiece identification
European std
50 mm bore

Technical features

Manual release button to open the linkage when air pressure is removed during setup. Pneumatic **ports on both sides** of the cylinder.	
Operating features	
Operating pressure	from 2 to 8 bar / from 30 to 115 psi
Lubrication	all the devices are lubricated for life at the factory. Inline air lubrication isn't required

Subject to change
without notice

C1XP63E

Clamp with double
workpiece identification
European std
63 mm bore

* DIMENSIONAL TOLERANCE FOR DOWEL HOLES: ±0.02
DIMENSIONAL TOLERANCE FOR THREADED HOLES: ±0.1

REV. 00 - 20/09/2018

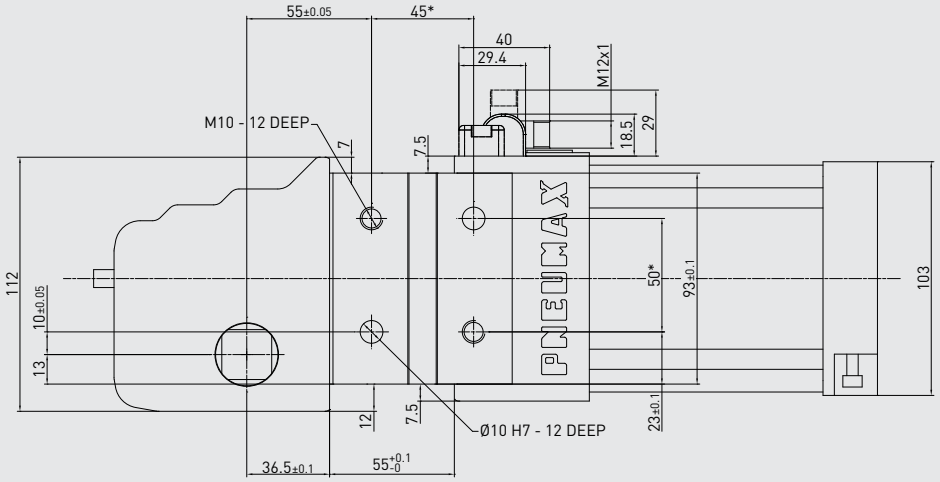

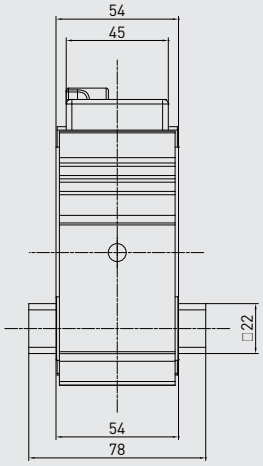

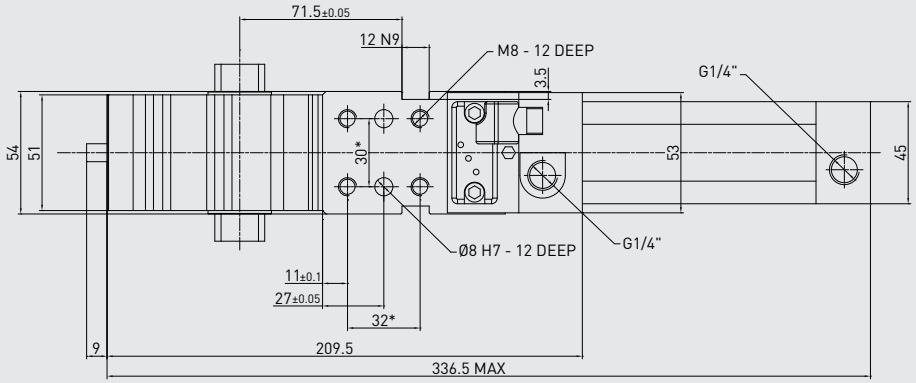

Technical features

Manual release button to open the linkage when air pressure is removed during setup. Pneumatic **ports on both sides** of the cylinder.	
Operating features	
Operating pressure	from 2 to 8 bar / from 30 to 115 psi
Lubrication	all the devices are lubricated for life at the factory. Inline air lubrication isn't required

Subject to change
without notice

* DIMENSIONAL TOLERANCE FOR DOWEL HOLES: ±0.02
DIMENSIONAL TOLERANCE FOR THREADED HOLES: ±0.1
NAAMS DIMENSIONAL VALUES ARE HIGHLIGHTED

REV. 00 - 20/09/2018

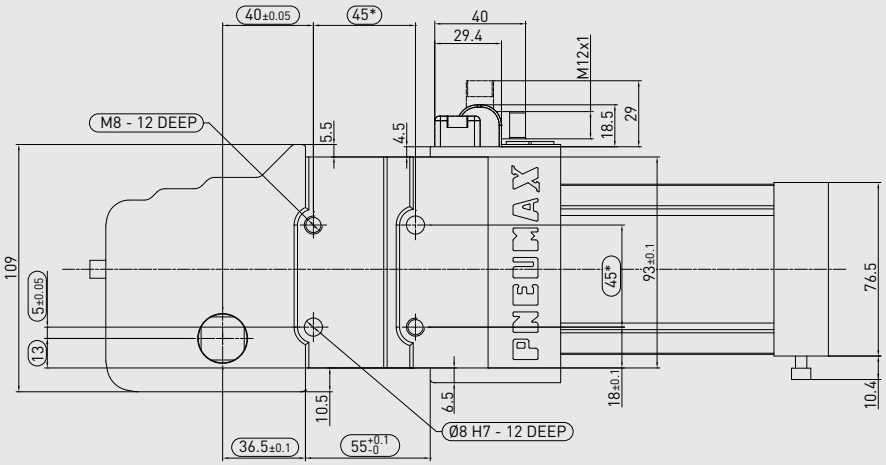

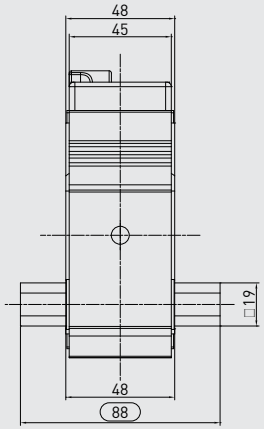

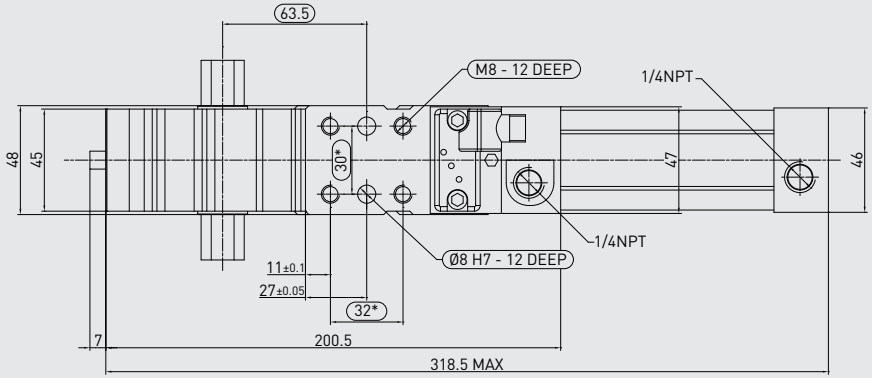

C2XP50E

Clamp with double workpiece identification
NAAMS std
50 mm bore

Technical features

Manual release button to open the linkage when air pressure is removed during setup. Pneumatic **ports on both sides** of the cylinder.	
Operating features	
Operating pressure	from 2 to 8 bar / from 30 to 115 psi
Lubrication	all the devices are lubricated for life at the factory. Inline air lubrication isn't required

Subject to change without notice

C2XP63E

Clamp with double
workpiece identification
NAAMS std
63 mm bore

* DIMENSIONAL TOLERANCE FOR DOWEL HOLES: ±0.02
DIMENSIONAL TOLERANCE FOR THREADED HOLES: ±0.1
NAAMS DIMENSIONAL VALUES ARE HIGHLIGHTED

REV. 00 - 20/09/2018

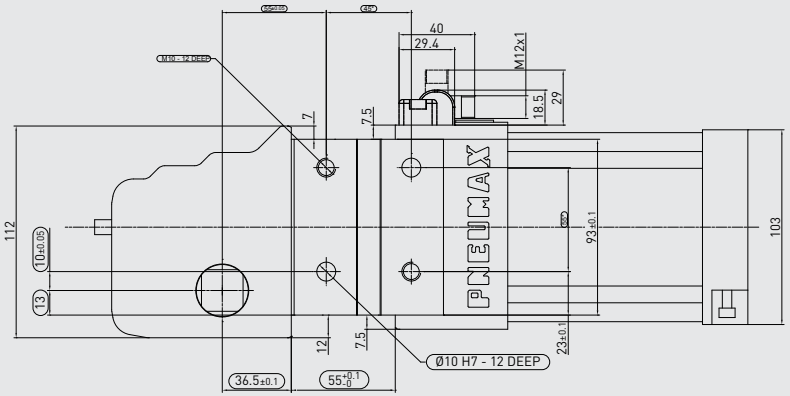

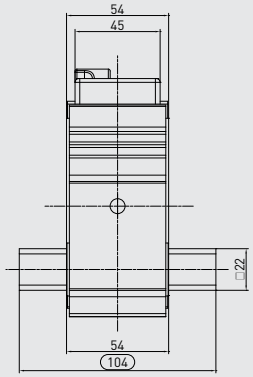

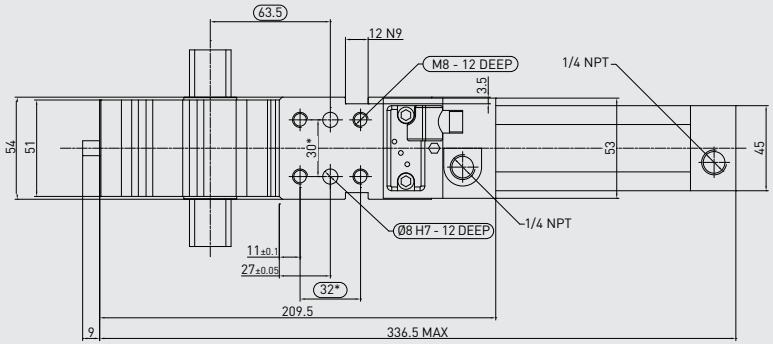

Technical features

Manual release button to open the linkage when air pressure is removed during setup. Pneumatic **ports on both sides** of the cylinder.	
Operating features	
Operating pressure	from 2 to 8 bar / from 30 to 115 psi
Lubrication	all the devices are lubricated for life at the factory. Inline air lubrication isn't required

Subject to change
without notice

* DIMENSIONAL TOLERANCE FOR DOWEL HOLES: ±0.02
DIMENSIONAL TOLERANCE FOR THREADED HOLES: ±0.1

REV. 00 - 20/09v/2018

ADWI14

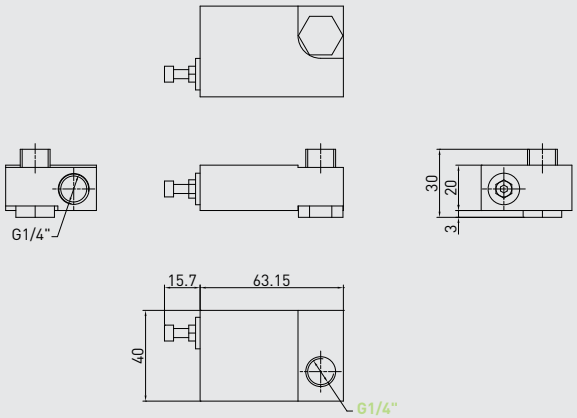

ADWI18

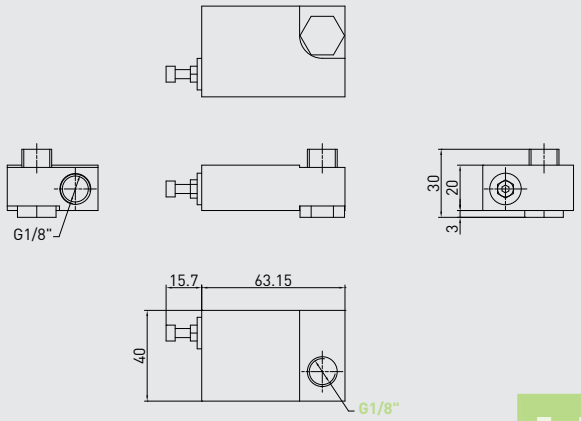

DEVICES FOR DOUBLE WORKPIECE IDENTIFICATION

G 1/4''

G 1/8''

Technical features

Manual release button to open the linkage when air pressure is removed during setup. Pneumatic **ports on both sides** of the cylinder.	
Operating features	
Operating pressure	from 2 to 8 bar / from 30 to 115 psi
Lubrication	all the devices are lubricated for life at the factory. Inline air lubrication isn't required

Subject to change without notice

WHY PNX

K CLAMPS
COMPENSATION AS KEYWORD!

The K clamps series is able to compensate different metal sheet thicknesses or tolerances on die casts, which are being more often used in the production lines.
No maintenance neither external adjustment to the clamp is required to get the compensating function.

SAFE SOLUTION
The linkage is irreversible and will remain locked in case of air loss.

MAINTENANCE FRIENDLY
Maintenance adjustment shimming is not required!

PATENTED

ORDERING STRING
K1-SERIES

K	1	P	50	E	G	3	A	02

VERSION
K = workpiece thickness compensation clamp

MOUNTING PATTERN STANDARD
1 = European mount

OPERATION
P = pneumatic
M = manual
D = pneumatic with manual operation

1 =
2 =
3 =

SIZE
40 = Ø 40 mm
50 = Ø 50 mm
63 = Ø 63 mm
80 = Ø 80 mm

SENSOR
E = electronic sensor with M12 swivel connector - PNP
A = electronic sensor with M12 swivel connector - NPN
N = no sensor
B = electronic sensor with M8 swivel connector - PNP

PORTS
G = GAS
N = NPT
D = dual GAS ports on rear end cap
A = dual NPT ports on rear end cap

ARM MOUNT
1 =
2 =
3 =
4 =

ARM MATERIAL
A = aluminum

CLAMP ARM TYPE
01 = wishbone, central, 15 mm offset, Ø 6H7*
02 = wishbone, right, 15 mm offset, Ø 6H7*
03 = wishbone, left, 15 mm offset, Ø 6H7*
04 = wishbone, central, 45 mm offset, Ø 6H7
05 = wishbone, right, 45 mm offset, Ø 6H7
06 = wishbone, left, 45 mm offset, Ø 6H7

Please see the charts in the datasheets for arm position as well as for max. opening angle

*for size 80 mm > 20 mm offset

Subject to change without notice

K1P40E

High compensation clamp

European std

40 mm bore

WEIGHT

kg 1.45

* DIMENSIONAL TOLERANCE FOR DOWEL HOLES: ±0.02
DIMENSIONAL TOLERANCE FOR THREADED HOLES: ±0.1

REV. 00 - 31/03/2015

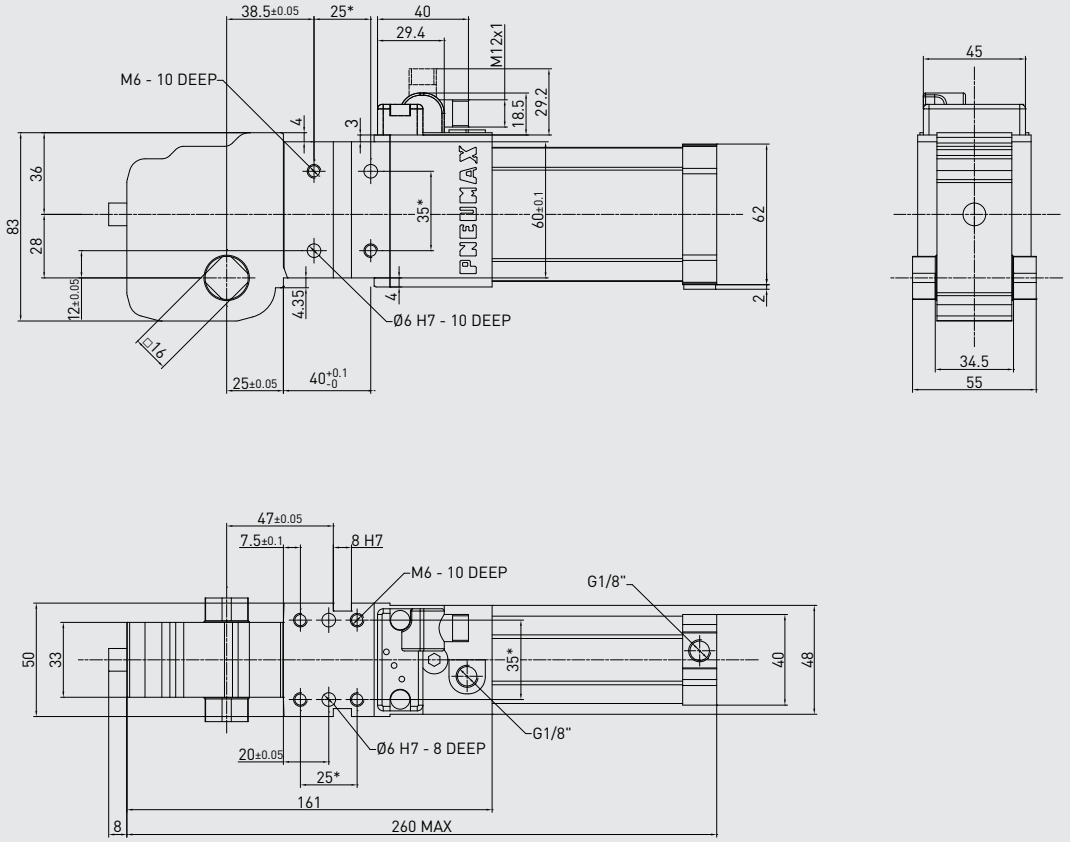

Technical features

Manual release button to open the linkage when air pressure is removed during setup. Pneumatic **ports on both sides** of the cylinder.	
Operating features	
Operating pressure	from 2 to 8 bar / from 30 to 115 psi
Lubrication	all the devices are lubricated for life at the factory. Inline air lubrication isn't required

Subject to change without notice

* DIMENSIONAL TOLERANCE FOR DOWEL HOLES: ±0.02
DIMENSIONAL TOLERANCE FOR THREADED HOLES: ±0.1

REV. 00 - 17/06/2015

WEIGHT

kg 1.75

D1 handle included

K1D_40E

High compensation clamp

European std

40 mm bore

With manual operation

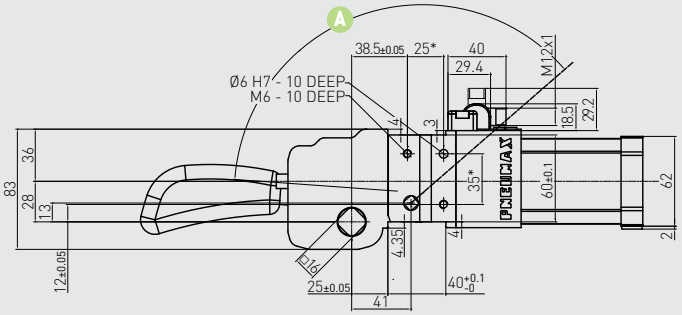

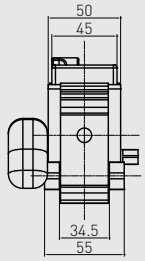

Manual operation

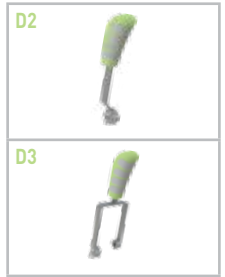

D1 VERSION

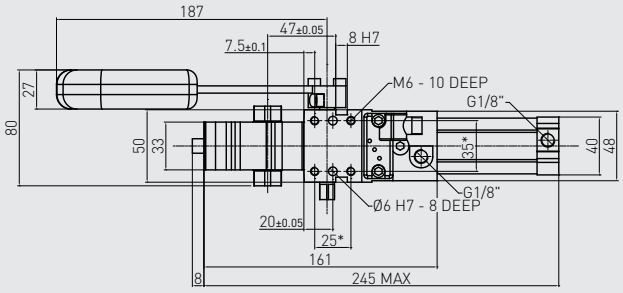

D2 VERSION

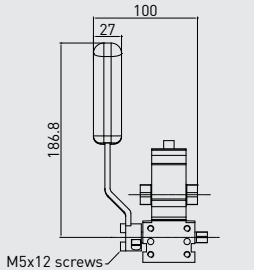

D3 VERSION

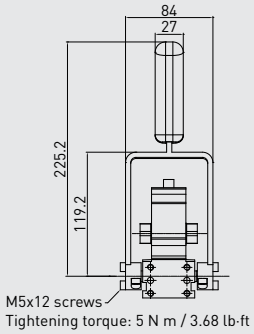

Handle swivel angle

Arm opening angle	Handle swivel angle A
0°	4.12°
15°	22.65°
30°	38.2°
45°	58.4°
60°	83.6°
75°	107.6°
90°	123.6°
105°	132.75°
120°	137.7°
135°	140°

Subject to change without notice

CLAMPING ARMS

16 mm shaft

Aluminum

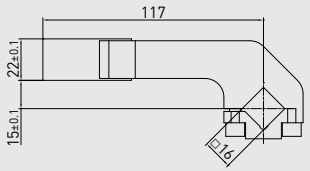

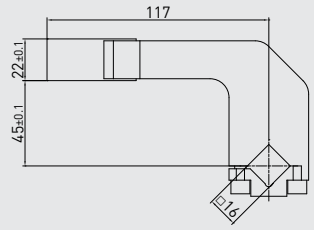

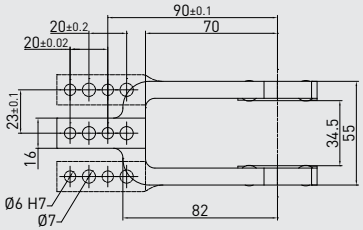

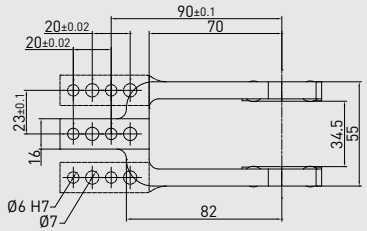

See "Special arm types" under the Accessories section at p. 236

16 mm shaft – 15 mm offset

PART NO.	MATERIAL	VERSION	WEIGHT (kg)	MAX OP. ANGLE POS. 1	MAX OP. ANGLE POS. 2	MAX OP. ANGLE POS. 3	MAX OP. ANGLE POS. 4
B1601	Aluminum	Central	0.24	135°	135°	N/A	45°
B1602	Aluminum	Right	0.24	135°	135°	N/A	45°
B1603	Aluminum	Left	0.24	135°	135°	N/A	45°

Screws: M6x20 **Tightening torque:** 10 N m / 7.37 lb·ft

16 mm shaft – 45 mm offset

PART NO.	MATERIAL	VERSION	WEIGHT (kg)	MAX OP. ANGLE POS. 1	MAX OP. ANGLE POS. 2	MAX OP. ANGLE POS. 3	MAX OP. ANGLE POS. 4
B1604	Aluminum	Central	0.3	135°	135°	N/A	N/A
B1605	Aluminum	Right	0.3	135°	135°	N/A	N/A
B1606	Aluminum	Left	0.3	135°	135°	N/A	N/A

Screws: M6x20 **Tightening torque:** 10 N m / 7.37 lb·ft

Subject to change without notice

FUNCTIONAL CHARTS
SIZE 40 mm

Clamping moment (at 5 bar / 72.5 psi)	130 N m / 95.88 lb·ft
Holding moment	380 N m / 280.27 lb·ft

The above data are meant for correct working conditions of the clamp – with the same performance level during its life time.

For applications which exceed the above data, please contact our sales representatives.

Material thickness compensation values and relative clamping force performance are available upon request: please get in touch with our sales representatives.

Calculation tool available upon demand

Please consult our technical representatives

Air consumption

Air consumption for complete cycle (opening and closing) REV. 00 - 17/06/2015

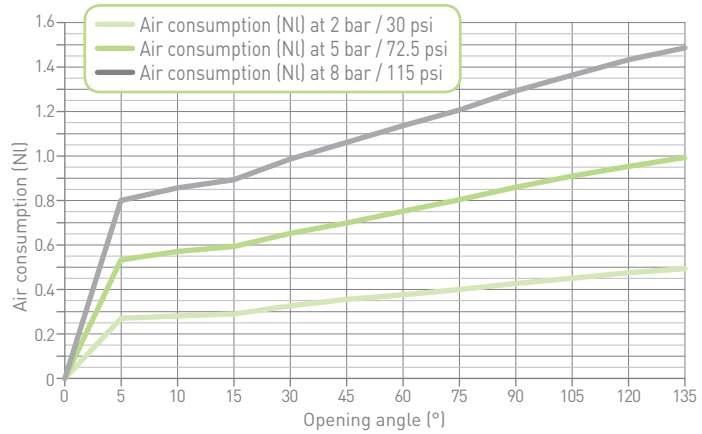

Tooling weight chart

5 bar operating pressure – 135° opening angle REV. 00 - 17/06/2015

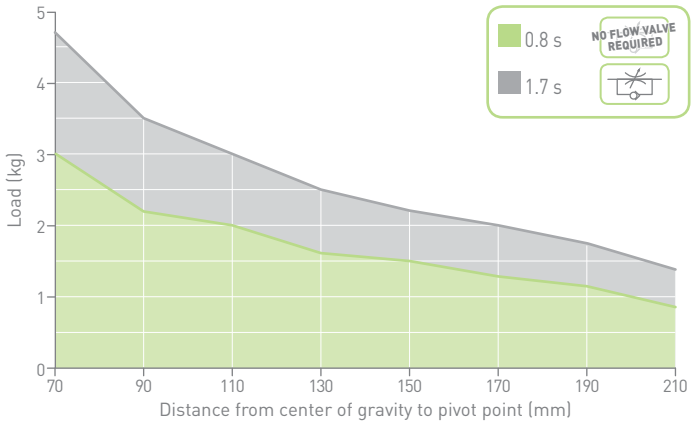

Subject to change without notice

K1P50E

High compensation clamp

European std

50 mm bore

WEIGHT

kg 2.7

* DIMENSIONAL TOLERANCE FOR DOWEL HOLES: ±0.02
DIMENSIONAL TOLERANCE FOR THREADED HOLES: ±0.1

REV. 00 - 31/03/2015

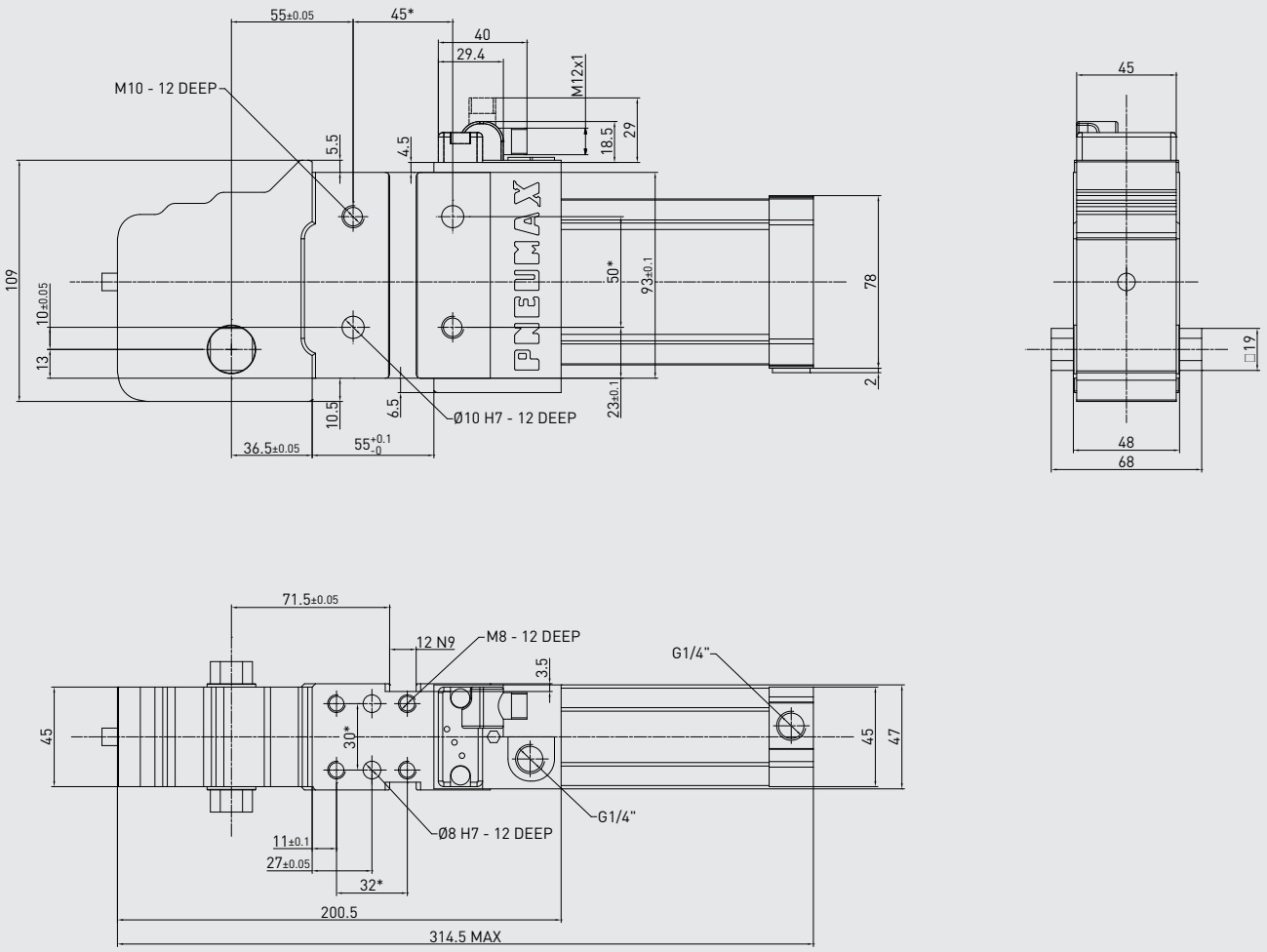

Technical features

Manual release button to open the linkage when air pressure is removed during setup. Pneumatic **ports on both sides** of the cylinder.	
Operating features	
Operating pressure	from 2 to 8 bar / from 30 to 115 psi
Lubrication	all the devices are lubricated for life at the factory. Inline air lubrication isn't required

Subject to change without notice

* DIMENSIONAL TOLERANCE FOR DOWEL HOLES: ±0.02
DIMENSIONAL TOLERANCE FOR THREADED HOLES: ±0.1

REV. 00 - 16/06/2015

WEIGHT

kg 3.1

D1 handle included

K1D_50E

High compensation clamp

European std

50 mm bore

With manual operation

Manual operation

D2

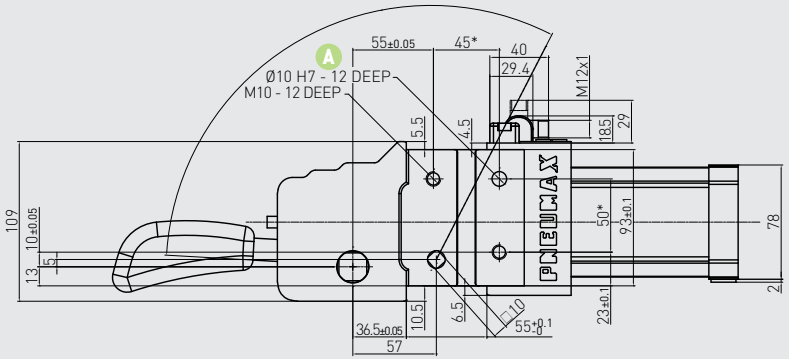

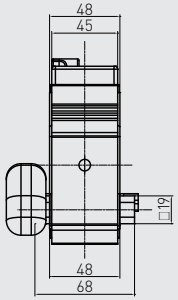

D1 VERSION

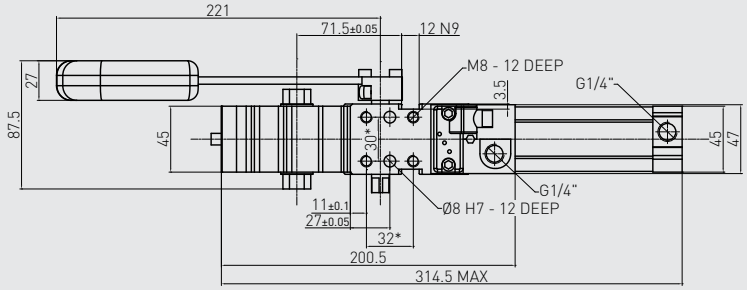

D2 VERSION

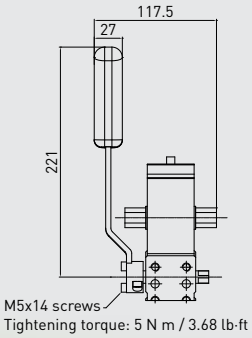

Handle swivel angle

Arm opening angle	Handle swivel angle A
0°	3.25°
15°	27°
30°	43°
45°	59.3°
60°	75.4°
75°	89.75°
90°	101°
105°	109°
120°	114.25°
135°	117.2°

Subject to change without notice

CLAMPING ARMS

19 mm shaft

Aluminum

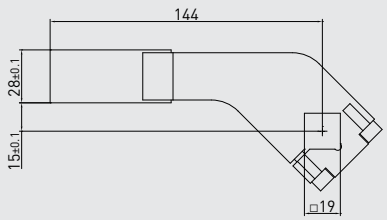

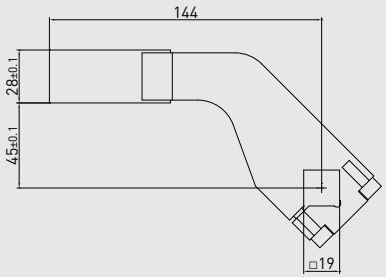

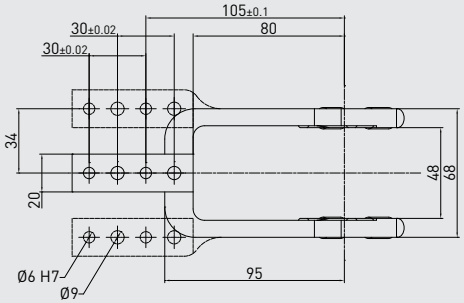

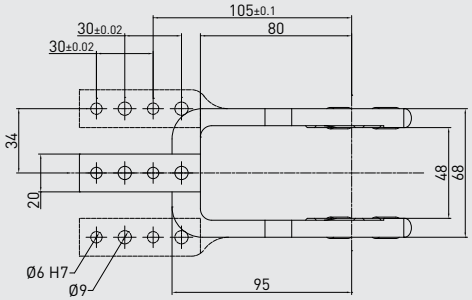

See "Special arm types" under the Accessories section at p. 236

19 mm shaft – 15 mm offset

PART NO.	MATERIAL	VERSION	WEIGHT (kg)	MAX OP. ANGLE POS. 1	MAX OP. ANGLE POS. 2	MAX OP. ANGLE POS. 3	MAX OP. ANGLE POS. 4
B1901	Aluminum	Central	0.41	135°	115°	135°	80°
B1902	Aluminum	Right	0.43	135°	115°	135°	80°
B1903	Aluminum	Left	0.43	135°	115°	135°	80°

Screws: M6x25 **Tightening torque:** 10 N m / 7.37 lb·ft

19 mm shaft – 45 mm offset

PART NO.	MATERIAL	VERSION	WEIGHT (kg)	MAX OP. ANGLE POS. 1	MAX OP. ANGLE POS. 2	MAX OP. ANGLE POS. 3	MAX OP. ANGLE POS. 4
B1904	Aluminum	Central	0.45	135°	135°	135°	80°
B1905	Aluminum	Right	0.46	135°	135°	135°	80°
B1906	Aluminum	Left	0.46	135°	135°	135°	80°

Screws: M6x25 **Tightening torque:** 10 N m / 7.37 lb·ft

Subject to change without notice

FUNCTIONAL CHARTS
SIZE 50 mm

Clamping moment (at 5 bar / 72.5 psi)	185 N m / 136.44 lb·ft
Holding moment	800 N m / 590.04 lb·ft

The above data are meant for correct working conditions of the clamp – with the same performance level during its life time.

For applications which exceed the above data, please contact our sales representatives.

Material thickness compensation values and relative clamping force performance are available upon request: please get in touch with our sales representatives.

Calculation tool available upon demand

Please consult our technical representatives

Air consumption
Air consumption for complete cycle (opening and closing) REV. 00 - 16/06/2015

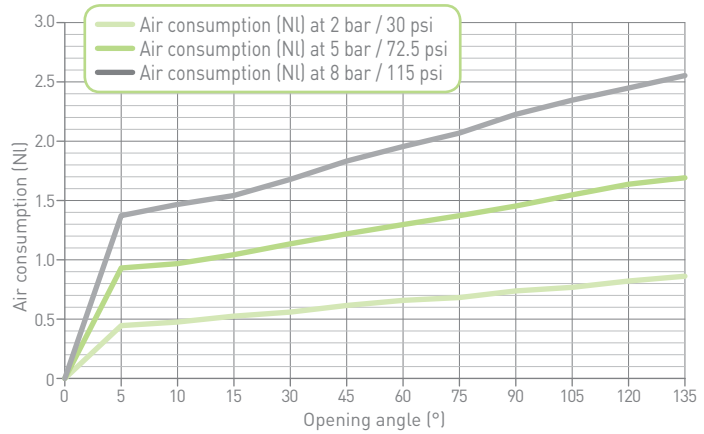

Tooling weight chart
5 bar operating pressure – 135° opening angle REV. 00 - 16/06/2015

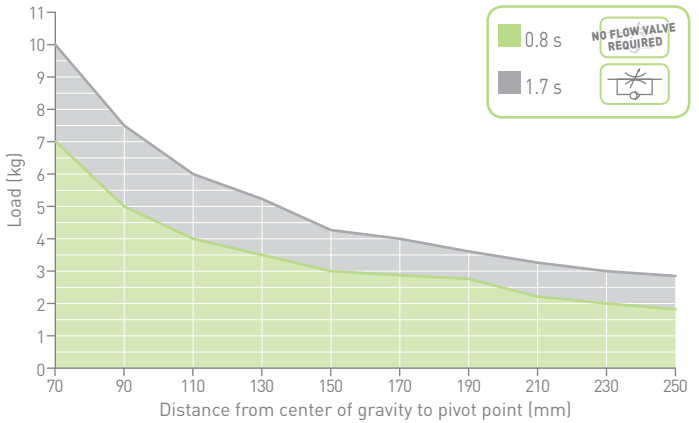

Subject to change without notice

K1P63E

High compensation clamp

European std

63 mm bore

WEIGHT

kg 3.5

* DIMENSIONAL TOLERANCE FOR DOWEL HOLES: ±0.02
DIMENSIONAL TOLERANCE FOR THREADED HOLES: ±0.1

REV. 00 - 31/03/2015

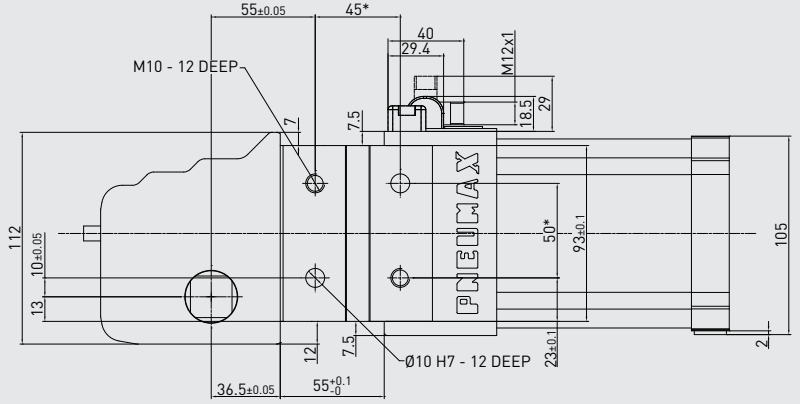

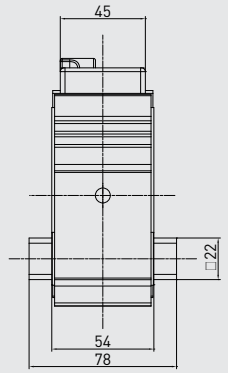

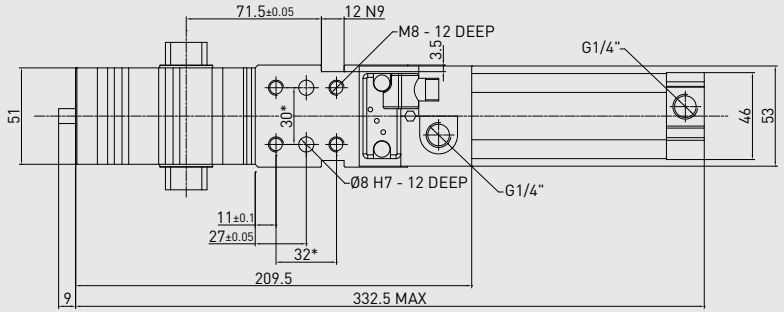

Technical features

Manual release button to open the linkage when air pressure is removed during setup. Pneumatic **ports on both sides** of the cylinder.	
Operating features	
Operating pressure	from 2 to 8 bar / from 30 to 115 psi
Lubrication	all the devices are lubricated for life at the factory. Inline air lubrication isn't required

Subject to change without notice

* DIMENSIONAL TOLERANCE FOR DOWEL HOLES: ±0.02
DIMENSIONAL TOLERANCE FOR THREADED HOLES: ±0.1

REV. 00 - 17/06/2015

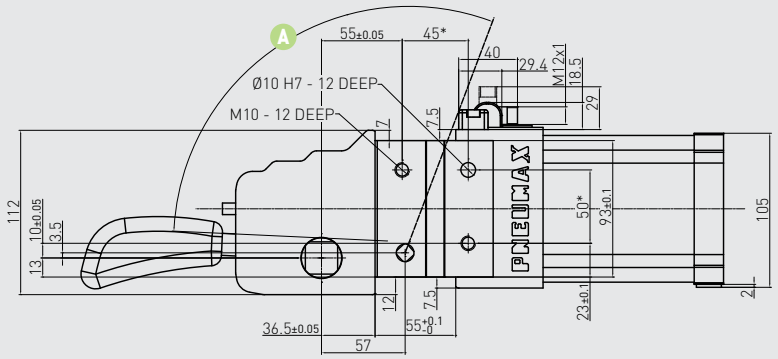

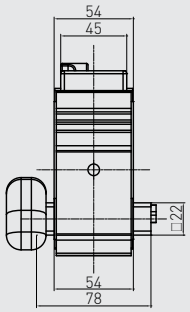

WEIGHT

kg 3.93

D1 handle included

K1D_63E

High compensation clamp

European std

63 mm bore

With manual operation

Manual operation

D1 VERSION

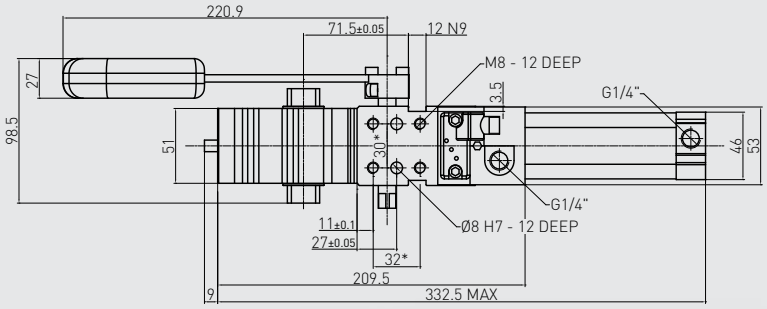

D2 VERSION

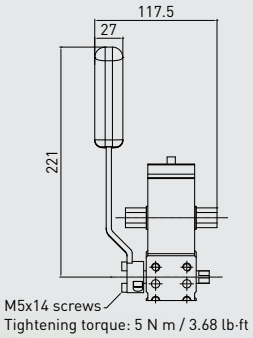

Handle swivel angle

Arm opening angle	Handle swivel angle A
0°	2.65°
15°	26.35°
30°	41.38°
45°	56°
60°	70.38°
75°	83.43°
90°	94°
105°	102°
120°	107°
135°	110.7°

Subject to change without notice

CLAMPING ARMS

22 mm shaft

Aluminum

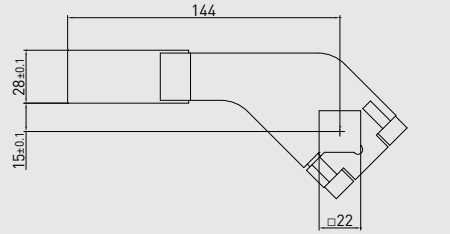

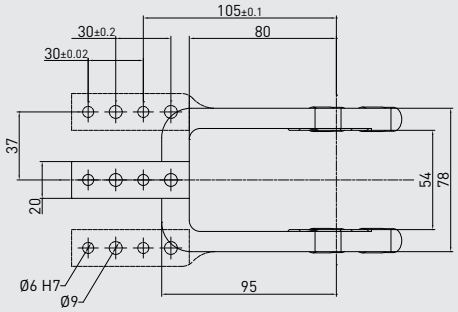

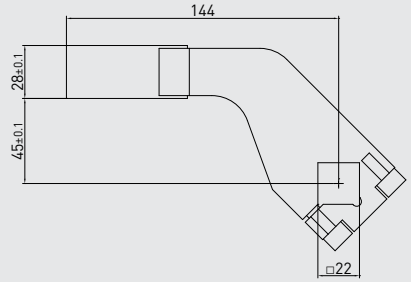

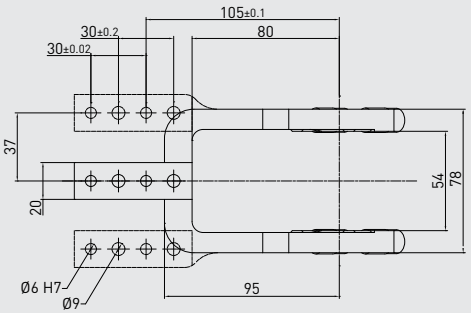

See "Special arm types" under the Accessories section at p. 236

22 mm shaft – 15 mm offset

PART NO.	MATERIAL	VERSION	WEIGHT (kg)	MAX OP. ANGLE POS. 1	MAX OP. ANGLE POS. 2	MAX OP. ANGLE POS. 3	MAX OP. ANGLE POS. 4
B2201	Aluminum	Central	0.52	135°	115°	135°	80°
B2202	Aluminum	Right	0.54	135°	115°	135°	80°
B2203	Aluminum	Left	0.54	135°	115°	135°	80°

Screws: M8x25 **Tightening torque:** 25 N m / 18.43 lb·ft

22 mm shaft – 45 mm offset

PART NO.	MATERIAL	VERSION	WEIGHT (kg)	MAX OP. ANGLE POS. 1	MAX OP. ANGLE POS. 2	MAX OP. ANGLE POS. 3	MAX OP. ANGLE POS. 4
B2204	Aluminum	Central	0.57	135°	135°	135°	75°
B2205	Aluminum	Right	0.58	135°	135°	135°	75°
B2206	Aluminum	Left	0.58	135°	135°	135°	75°

Screws: M8x25 **Tightening torque:** 25 N m / 18.43 lb·ft

Subject to change without notice

FUNCTIONAL CHARTS
SIZE 63 mm

Clamping moment (at 5 bar / 72.5 psi)	390 N m / 287.64 lb·ft
Holding moment	1,500 N m / 1,106.34 lb·ft

The above data are meant for correct working conditions of the clamp – with the same performance level during its life time.

For applications which exceed the above data, please contact our sales representatives.

Air consumption

Air consumption for complete cycle (opening and closing) REV. 00 - 17/06/2015

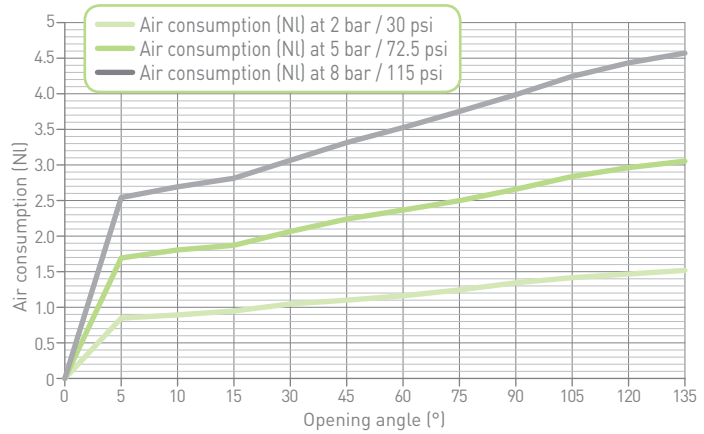

Tooling weight chart

5 bar operating pressure – 135° opening angle REV. 00 - 17/06/2015

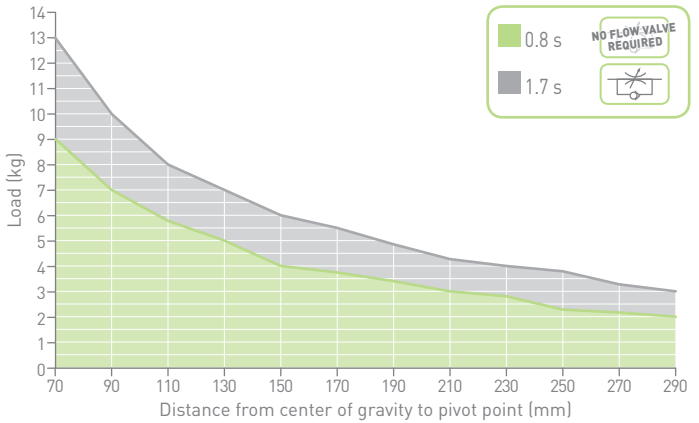

Calculation tool available upon demand

Please consult our technical representatives

Subject to change without notice

K1P80E

High compensation clamp

European std

80 mm bore

WEIGHT

kg 8.54

* DIMENSIONAL TOLERANCE FOR DOWEL HOLES: ±0.02
DIMENSIONAL TOLERANCE FOR THREADED HOLES: ±0.1

REV. 00 - 31/03/2015

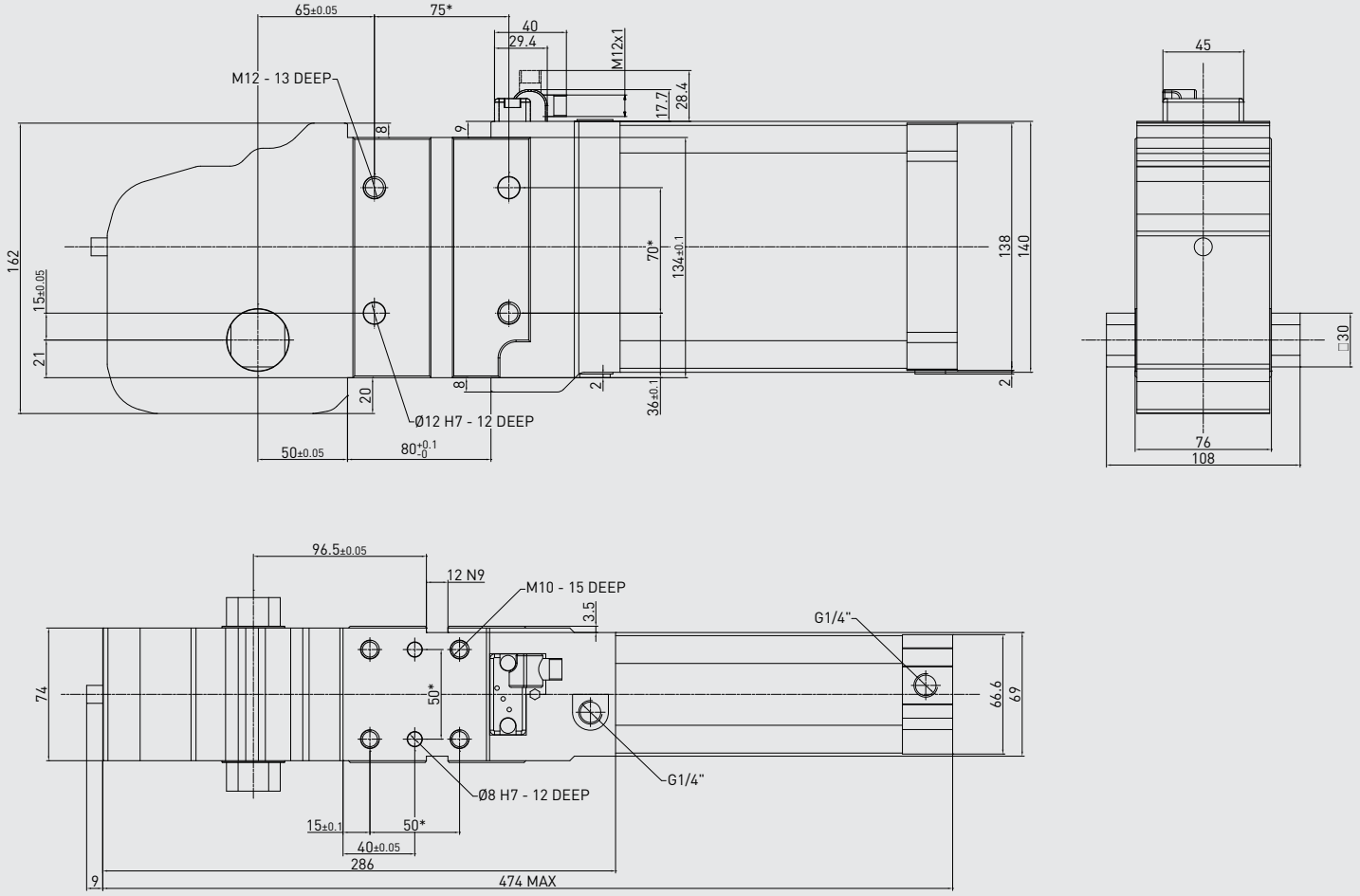

Technical features

Manual release button to open the linkage when air pressure is removed during setup. Pneumatic **ports on both sides** of the cylinder.	
Operating features	
Operating pressure	from 2 to 8 bar / from 30 to 115 psi
Lubrication	all the devices are lubricated for life at the factory. Inline air lubrication isn't required

Subject to change without notice

* DIMENSIONAL TOLERANCE FOR DOWEL HOLES: ±0.02
DIMENSIONAL TOLERANCE FOR THREADED HOLES: ±0.1

REV. 00 - 03/03/2017

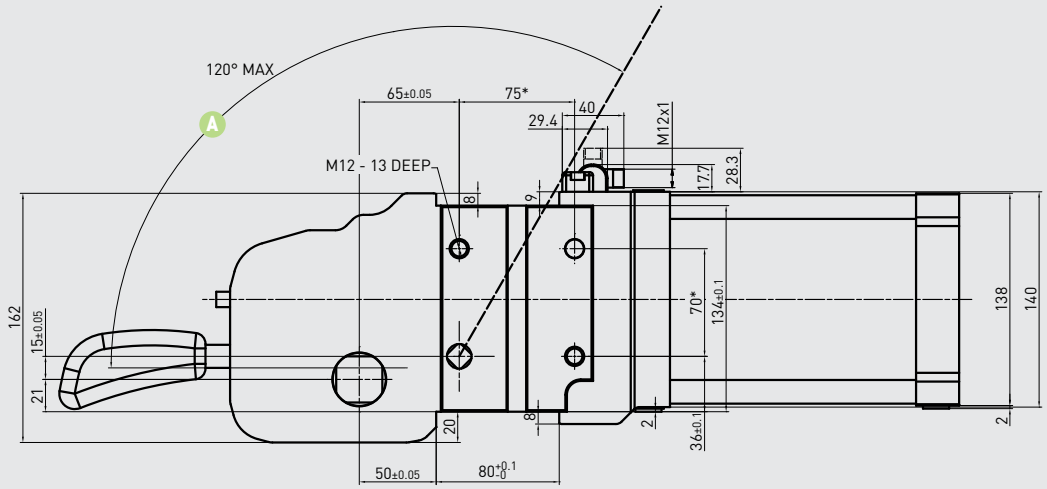

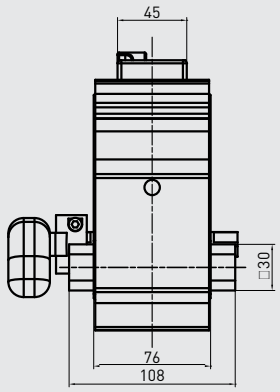

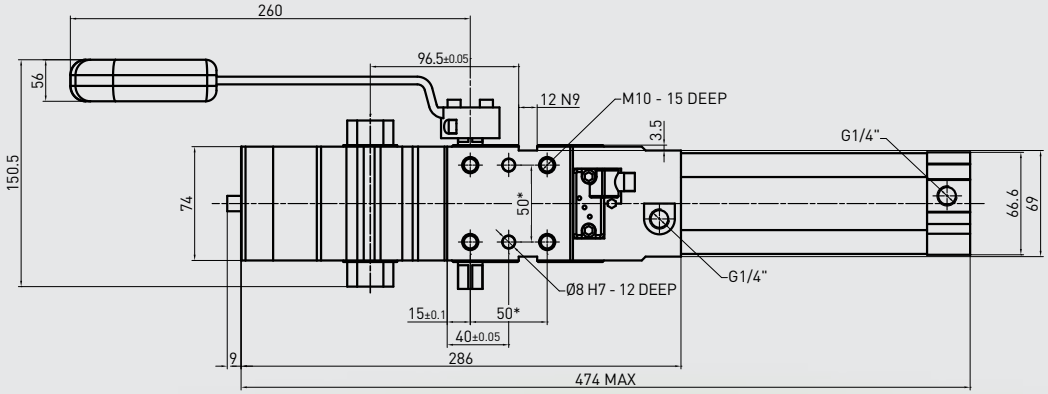

WEIGHT

kg
8.8

K1D_80E

Power clamp

European std

80 mm bore

With manual operation

Handle swivel angle

Arm opening angle	Handle swivel angle A
0°	3°
15°	22°
30°	36°
45°	51.3°
60°	68°
75°	84.2°
90°	98°
105°	108°
120°	115°
135°	119°

Subject to change
without notice

CLAMPING ARMS

30 mm shaft

Aluminum

See "Special arm types" under the Accessories section at p. 236

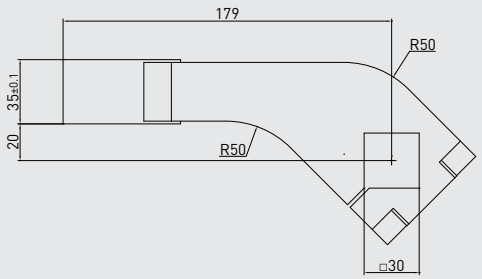

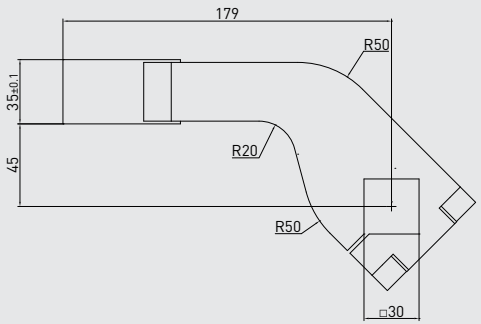

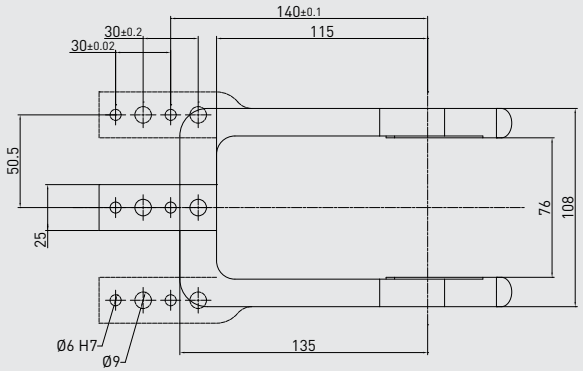

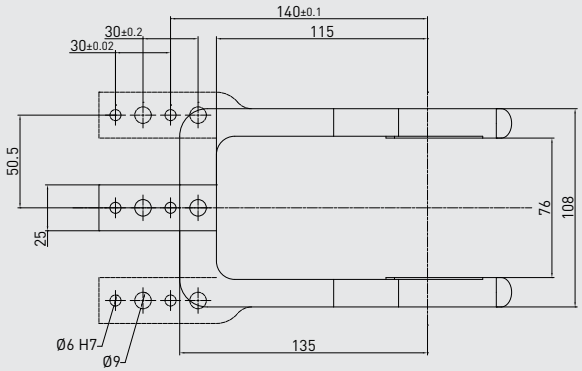

30 mm shaft – 20 mm offset

PART NO.	MATERIAL	VERSION	WEIGHT (kg)	MAX OP. ANGLE POS. 1	MAX OP. ANGLE POS. 2	MAX OP. ANGLE POS. 3	MAX OP. ANGLE POS. 4
B3001	Aluminum	Central	1.1	135°	110°	135°	75°
B3002	Aluminum	Right	1.15	135°	110°	135°	75°
B3003	Aluminum	Left	1.15	135°	110°	135°	75°

Screws: M10x35 **Tightening torque:** 35 N m / 25.81 lb·ft

30 mm shaft – 45 mm offset

PART NO.	MATERIAL	VERSION	WEIGHT (kg)	MAX OP. ANGLE POS. 1	MAX OP. ANGLE POS. 2	MAX OP. ANGLE POS. 3	MAX OP. ANGLE POS. 4
B3004	Aluminum	Central	1.18	135°	110°	135°	75°
B3005	Aluminum	Right	1.2	135°	110°	135°	75°
B3006	Aluminum	Left	1.2	135°	110°	135°	75°

Screws: M10x35 **Tightening torque:** 35 N m / 25.81 lb·ft

REV. 00 - 29/05/2015

Subject to change without notice

FUNCTIONAL CHARTS
SIZE 80 mm

Clamping moment (at 5 bar / 72.5 psi)	850 N m / 626.92 lb·ft
Holding moment	2,500 N m / 1,843.90 lb·ft

The above data are meant for correct working conditions of the clamp – with the same performance level during its life time.

For applications which exceed the above data, please contact our sales representatives.

Material thickness compensation values and relative clamping force performance are available upon request: please get in touch with our sales representatives.

Air consumption

Air consumption for complete cycle (opening and closing) REV. 00 - 29/05/2015

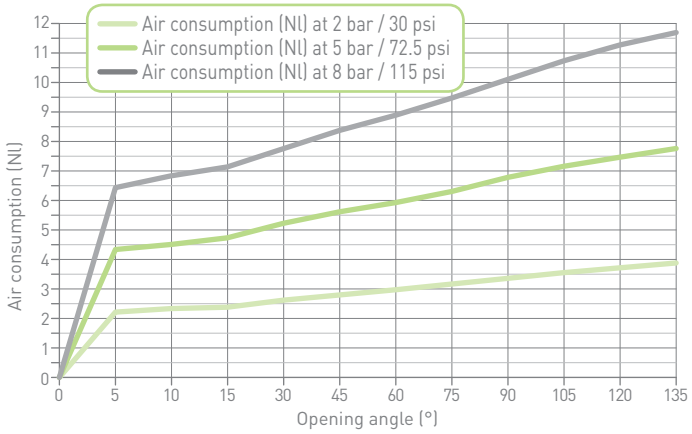

Tooling weight chart

5 bar operating pressure – 135° opening angle REV. 00 - 29/05/2015

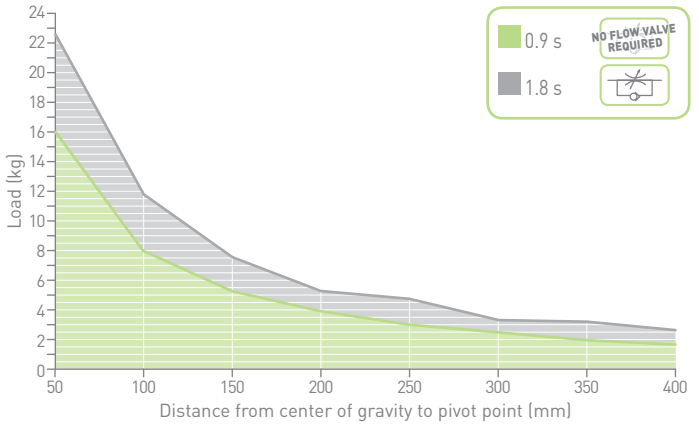

Calculation tool available upon demand

Please consult our technical representatives

Subject to change without notice

ORDERING STRING K2-SERIES

GLOBAL STANDARD COMPONENTS NAAMS

K | 2 | P | 50 | E | G | L

VERSION
K = workpiece thickness compensation clamp

MOUNTING PATTERN STANDARD
2 = NAAMS mount

OPERATION
P = pneumatic
D = pneumatic with manual operation

2 =

SIZE
50 = Ø 50 mm
63 = Ø 63 mm
80 = Ø 80 mm

SENSOR
E = electronic sensor with M12 swivel connector - PNP
A = electronic sensor with M12 swivel connector - NPN
N = no sensor
B = electronic sensor with M8 swivel connector - PNP

PORTS
G = GAS
N = NPT
D = dual GAS ports on rear end cap
A = dual NPT ports on rear end cap

SHAFT OUTPUT
_ = dual output
L = single output - LEFT
R = single output - RIGHT

NAAMS clamping arms to be ordered separately

Please see the charts in the datasheets for arm position as well as for max. opening angle

Subject to change without notice

* DIMENSIONAL TOLERANCE FOR DOWEL HOLES: ±0.02
DIMENSIONAL TOLERANCE FOR THREADED HOLES: ±0.1
NAAMS DIMENSIONAL VALUES ARE HIGHLIGHTED

REV. 01 - 15/05/2016

WEIGHT

kg 2.7

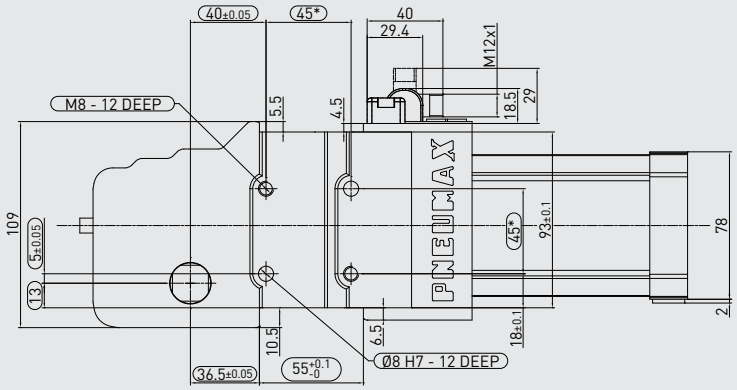

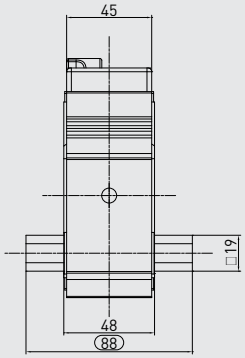

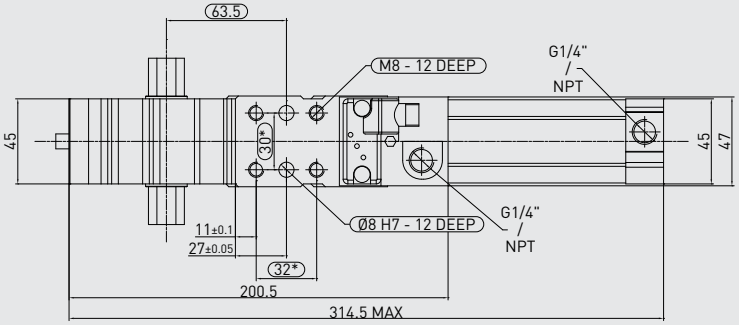

GLOBAL STANDARDS COMPONENTS
NAAMS

K2P50E

High compensation clamp

NAAMS std

50 mm bore

Technical features

Manual release button to open the linkage when air pressure is removed during setup. Pneumatic **ports on both sides** of the cylinder.	
Operating features	
Operating pressure	from 2 to 8 bar / from 30 to 115 psi
Lubrication	all the devices are lubricated for life at the factory. Inline air lubrication isn't required

Subject to change without notice

WEIGHT

kg 3.17

D2 handle included

* DIMENSIONAL TOLERANCE FOR DOWEL HOLES: ±0.02
DIMENSIONAL TOLERANCE FOR THREADED HOLES: ±0.1

REV. 01 - 15/05/2016

GLOBAL STANDARD COMPONENTS NAAMS

K2D250E

High compensation clamp

NAAMS std

50 mm bore

With manual operation

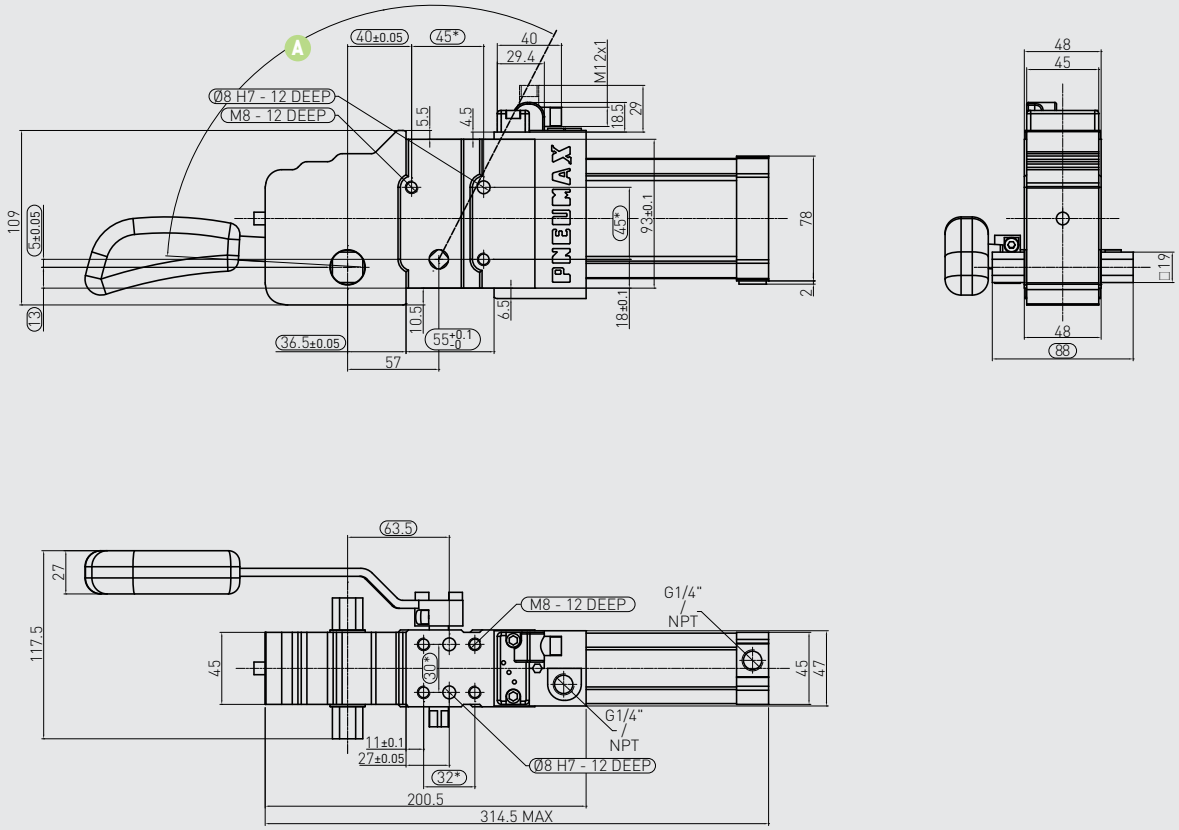

Handle swivel angle

Arm opening angle	Handle swivel angle A
0°	3.25°
15°	27°
30°	43°
45°	59.3°
60°	75.4°
75°	89.75°
90°	101°
105°	109°
120°	114.25°
135°	117.2°

Subject to change without notice

REV. 02 - 16/01/2018

0 mm OFFSET

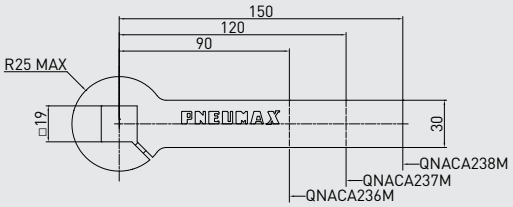

25 mm OFFSET

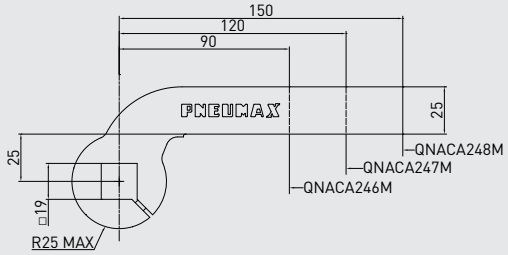

50 mm OFFSET

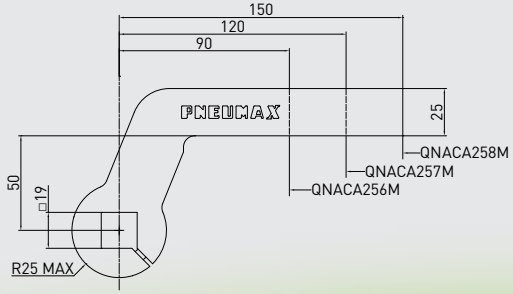

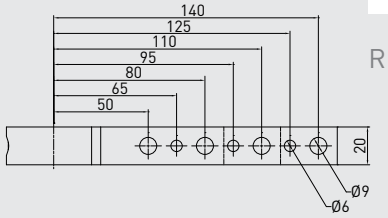

19 mm shaft – 0 mm offset

PART NO.	MATERIAL	LENGTH	WEIGHT (kg)	MAX OP. ANGLE POS. 1	MAX OP. ANGLE POS. 2	MAX OP. ANGLE POS. 3	MAX OP. ANGLE POS. 4
QNACA236M	Steel	90	0.4	135°	135°	135°	135°
QNACA237M	Steel	120	0.49	135°	135°	135°	135°
QNACA238M	Steel	150	0.58	135°	135°	135°	135°

Screws: M6x25 **Tightening torque:** 10 N m / 7.37 lb·ft

19 mm shaft – 25 mm offset

PART NO.	MATERIAL	LENGTH	WEIGHT (kg)	MAX OP. ANGLE POS. 1	MAX OP. ANGLE POS. 2	MAX OP. ANGLE POS. 3	MAX OP. ANGLE POS. 4
QNACA246M	Steel	90	0.44	135°	135°	135°	135°
QNACA247M	Steel	120	0.52	135°	135°	135°	135°
QNACA248M	Steel	150	0.6	135°	135°	135°	135°

Screws: M6x25 **Tightening torque:** 10 N m / 7.37 lb·ft

19 mm shaft – 50 mm offset

PART NO.	MATERIAL	LENGTH	WEIGHT (kg)	MAX OP. ANGLE POS. 1	MAX OP. ANGLE POS. 2	MAX OP. ANGLE POS. 3	MAX OP. ANGLE POS. 4
QNACA256M	Steel	90	0.52	135°	135°	135°	135°
QNACA257M	Steel	120	0.6	135°	135°	135°	135°
QNACA258M	Steel	150	0.68	135°	135°	135°	135°

Screws: M6x25 **Tightening torque:** 10 N m / 7.37 lb·ft

CLAMPING ARMS

19 mm shaft

Steel

Subject to change without notice

FUNCTIONAL CHARTS
SIZE 50 mm

Clamping moment (at 5 bar / 72.5 psi)	185 N m / 136.44 lb·ft
Holding moment	800 N m / 590.04 lb·ft

The above data are meant for correct working conditions of the clamp – with the same performance level during its life time.

For applications which exceed the above data, please contact our sales representatives.

Material thickness compensation values and relative clamping force performance are available upon request: please get in touch with our sales representatives.

Air consumption

Air consumption for complete cycle (opening and closing) REV. 00 - 17/06/2015

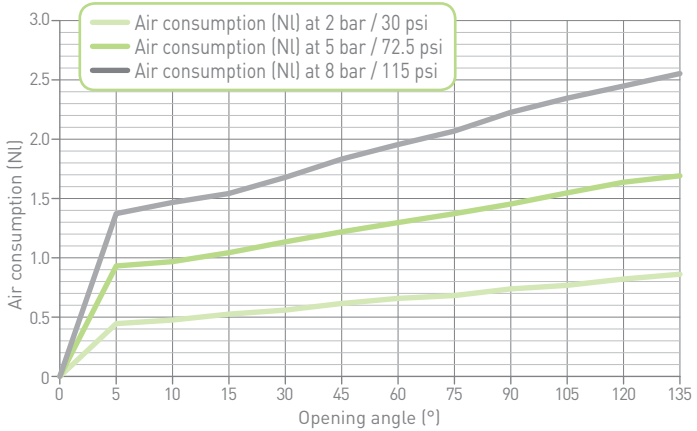

Tooling weight chart

5 bar operating pressure – 135° opening angle REV. 00 - 17/06/2015

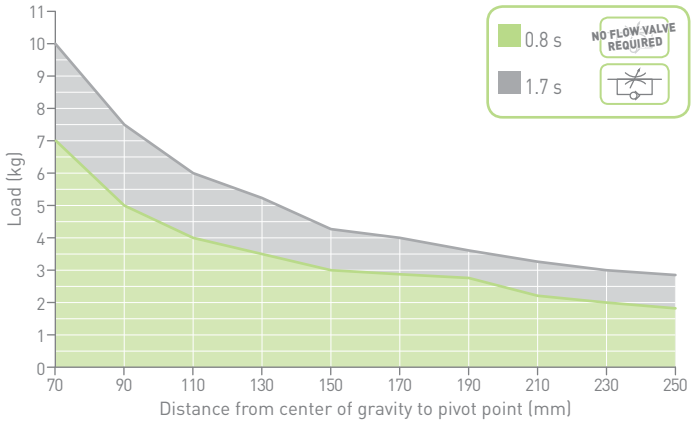

Calculation tool available upon demand

Please consult our technical representatives

Subject to change without notice

* DIMENSIONAL TOLERANCE FOR DOWEL HOLES: ±0.02
DIMENSIONAL TOLERANCE FOR THREADED HOLES: ±0.1
NAAMS DIMENSIONAL VALUES ARE HIGHLIGHTED

REV. 00 - 31/03/2015

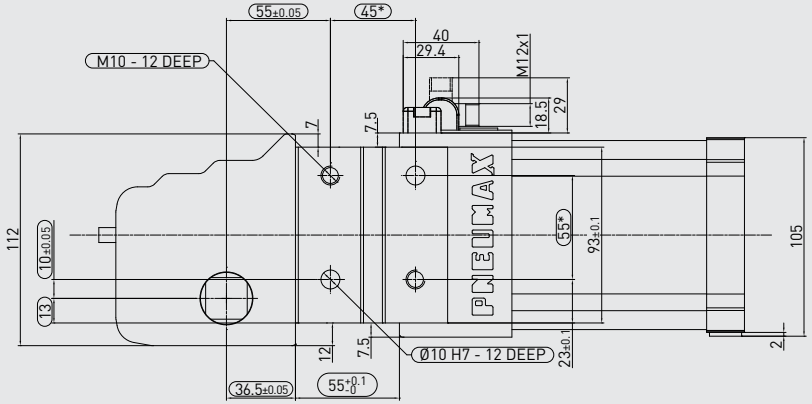

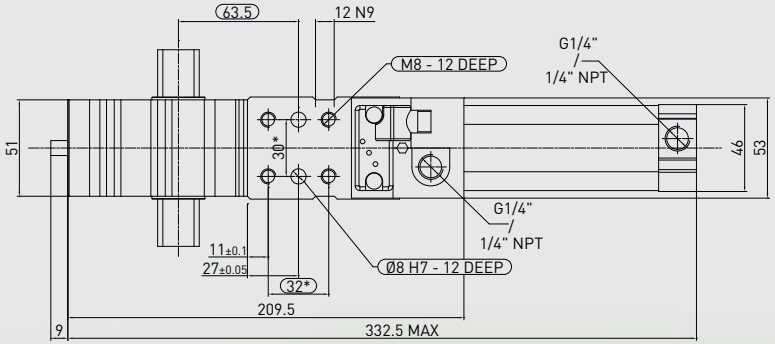

WEIGHT

kg
3.5

GLOBAL STANDARDS COMPONENTS
NAAMS

K2P63E

High compensation clamp

NAAMS std

63 mm bore

Technical features

Manual release button to open the linkage when air pressure is removed during setup. Pneumatic **ports on both sides** of the cylinder.	
Operating features	
Operating pressure	from 2 to 8 bar / from 30 to 115 psi
Lubrication	all the devices are lubricated for life at the factory. Inline air lubrication isn't required

Subject to change without notice

WEIGHT

kg 4

D2 handle included

* DIMENSIONAL TOLERANCE FOR DOWEL HOLES: ±0.02
DIMENSIONAL TOLERANCE FOR THREADED HOLES: ±0.1

REV. 00 - 17/06/2015

GLOBAL STANDARD COMPONENTS NAAMS

K2D263E

High compensation clamp

NAAMS std

63 mm bore

With manual operation

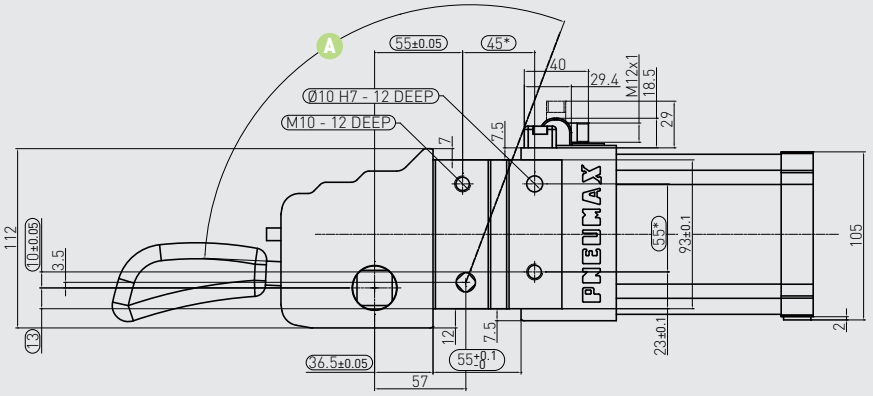

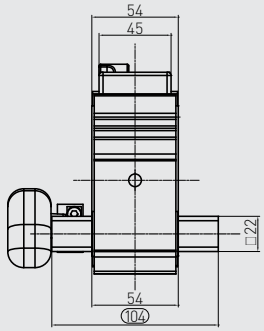

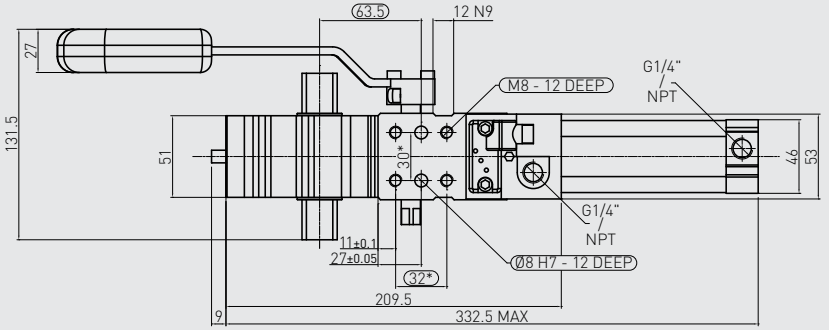

Handle swivel angle

Arm opening angle	Handle swivel angle A
0°	2.65°
15°	26.35°
30°	41.38°
45°	56°
60°	70.38°
75°	83.43°
90°	94°
105°	102°
120°	107°
135°	110.7°

Subject to change without notice

REV. 01 - 31/07/2015

0 mm OFFSET

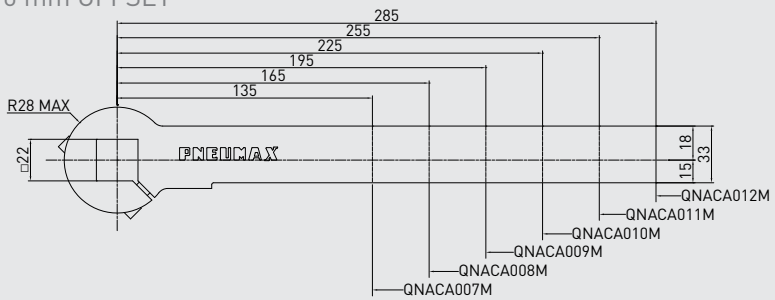

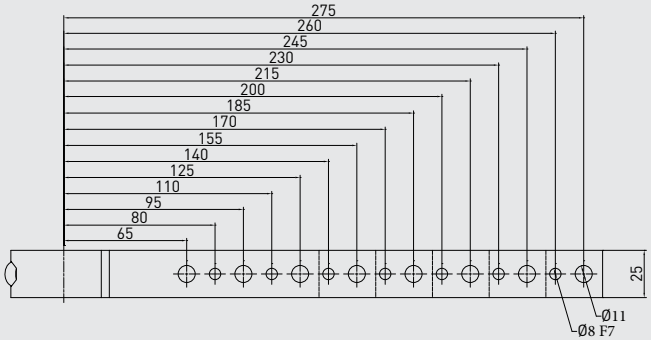

25 mm OFFSET

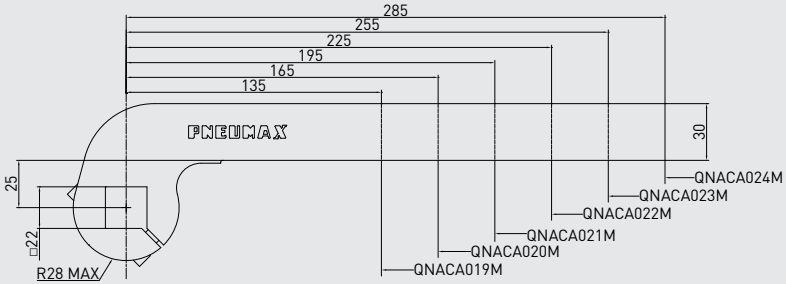

GLOBAL STANDARD COMPONENTS NAAMS

CLAMPING ARMS

22 mm shaft

Steel

22 mm shaft – 0 mm offset

PART NO.	MATERIAL	LENGTH	WEIGHT (kg)	MAX OP. ANGLE POS. 1	MAX OP. ANGLE POS. 2	MAX OP. ANGLE POS. 3	MAX OP. ANGLE POS. 4
QNACA007M	Steel	135	0.72	135°	135°	135°	135°
QNACA008M	Steel	165	0.83	135°	135°	135°	135°
QNACA009M	Steel	195	0.94	135°	135°	135°	135°
QNACA010M	Steel	225	1.05	135°	135°	135°	135°
QNACA011M	Steel	255	1.16	135°	135°	135°	135°
QNACA012M	Steel	285	1.28	135°	135°	135°	135°

Screws: M8x18 **Tightening torque:** 25 N m / 18.43 lb·ft

NAAMS

22 mm shaft – 25 mm offset

PART NO.	MATERIAL	LENGTH	WEIGHT (kg)	MAX OP. ANGLE POS. 1	MAX OP. ANGLE POS. 2	MAX OP. ANGLE POS. 3	MAX OP. ANGLE POS. 4
QNACA019M	Steel	135	0.84	135°	135°	135°	135°
QNACA020M	Steel	165	0.95	135°	135°	135°	135°
QNACA021M	Steel	195	1.05	135°	135°	135°	135°
QNACA022M	Steel	225	1.16	135°	135°	135°	135°
QNACA023M	Steel	255	1.26	135°	135°	135°	135°
QNACA024M	Steel	285	1.37	135°	135°	135°	135°

Screws: M8x18 **Tightening torque:** 25 N m / 18.43 lb·ft

NAAMS

Subject to change without notice

CLAMPING ARMS

22 mm shaft

Steel

70 mm OFFSET

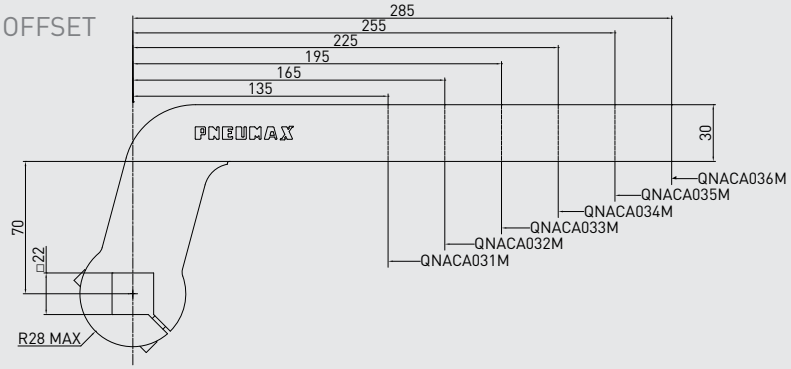

120 mm OFFSET

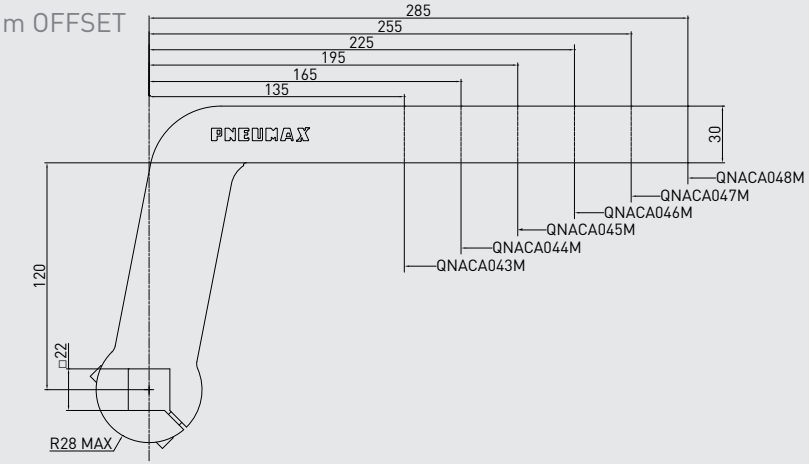

REV. 00 - 31/03/2015

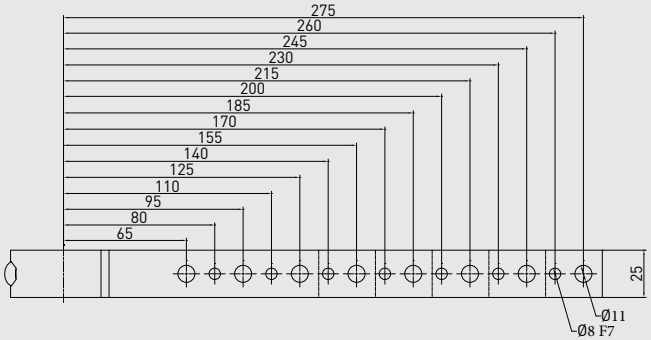

22 mm shaft – 70 mm offset

PART NO.	MATERIAL	LENGTH	WEIGHT (kg)	MAX OP. ANGLE POS. 1	MAX OP. ANGLE POS. 2	MAX OP. ANGLE POS. 3	MAX OP. ANGLE POS. 4
QNACA031M	Steel	135	1.05	135°	135°	135°	135°
QNACA032M	Steel	165	1.16	135°	135°	135°	135°
QNACA033M	Steel	195	1.27	135°	135°	135°	135°
QNACA034M	Steel	225	1.38	135°	135°	135°	135°
QNACA035M	Steel	255	1.49	135°	135°	135°	135°
QNACA036M	Steel	285	1.6	135°	135°	135°	135°

Screws: M8x18 **Tightening torque:** 25 N m / 18.43 lb·ft

22 mm shaft – 120 mm offset

PART NO.	MATERIAL	LENGTH	WEIGHT (kg)	MAX OP. ANGLE POS. 1	MAX OP. ANGLE POS. 2	MAX OP. ANGLE POS. 3	MAX OP. ANGLE POS. 4
QNACA043M	Steel	135	1.27	135°	135°	135°	135°
QNACA044M	Steel	165	1.37	135°	135°	135°	135°
QNACA045M	Steel	195	1.48	135°	135°	135°	135°
QNACA046M	Steel	225	1.58	135°	135°	135°	135°
QNACA047M	Steel	255	1.69	135°	135°	135°	135°
QNACA048M	Steel	285	1.8	135°	135°	135°	135°

Screws: M8x18 **Tightening torque:** 25 N m / 18.43 lb·ft

Subject to change without notice

FUNCTIONAL CHARTS
SIZE 63 mm

Clamping moment (at 5 bar / 72.5 psi)	390 N m / 287.64 lb·ft
Holding moment	1,500 N m / 1,106.34 lb·ft

The above data are meant for correct working conditions of the clamp – with the same performance level during its life time.

For applications which exceed the above data, please contact our sales representatives.

Material thickness compensation values and relative clamping force performance are available upon request: please get in touch with our sales representatives.

Calculation tool available upon demand

Please consult our technical representatives

Air consumption
Air consumption for complete cycle (opening and closing) REV. 00 - 17/06/2015

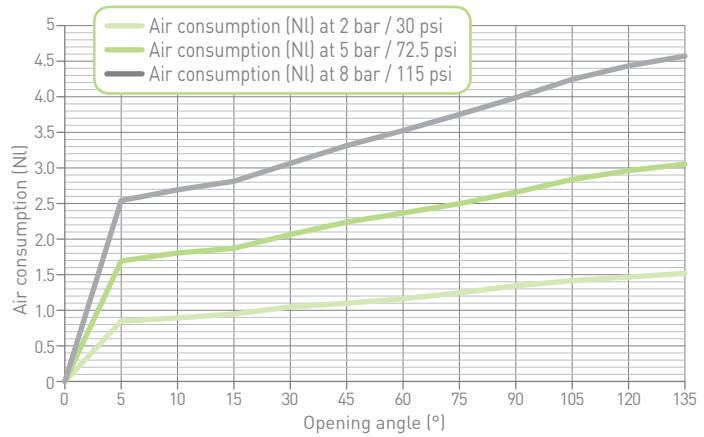

Tooling weight chart
5 bar operating pressure – 135° opening angle REV. 00 - 17/06/2015

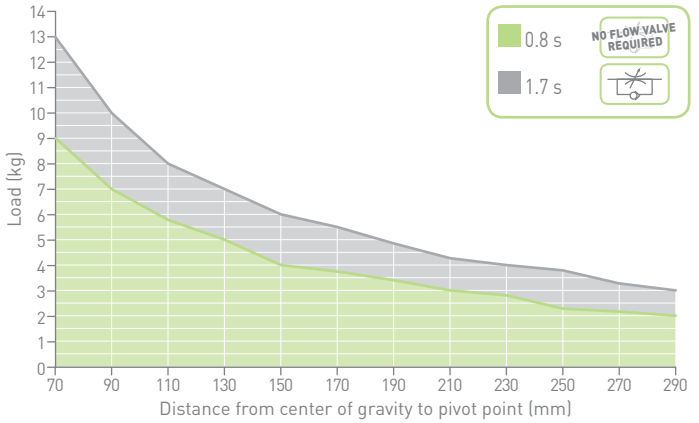

Subject to change without notice

GLOBAL STANDARD COMPONENTS
NAAMS

K2P80E

High compensation clamp

NAAMS std

80 mm bore

WEIGHT

kg
8.75

* DIMENSIONAL TOLERANCE FOR DOWEL HOLES: ±0.02
DIMENSIONAL TOLERANCE FOR THREADED HOLES: ±0.1
NAAMS DIMENSIONAL VALUES ARE HIGHLIGHTED

REV. 01 - 31/07/2015

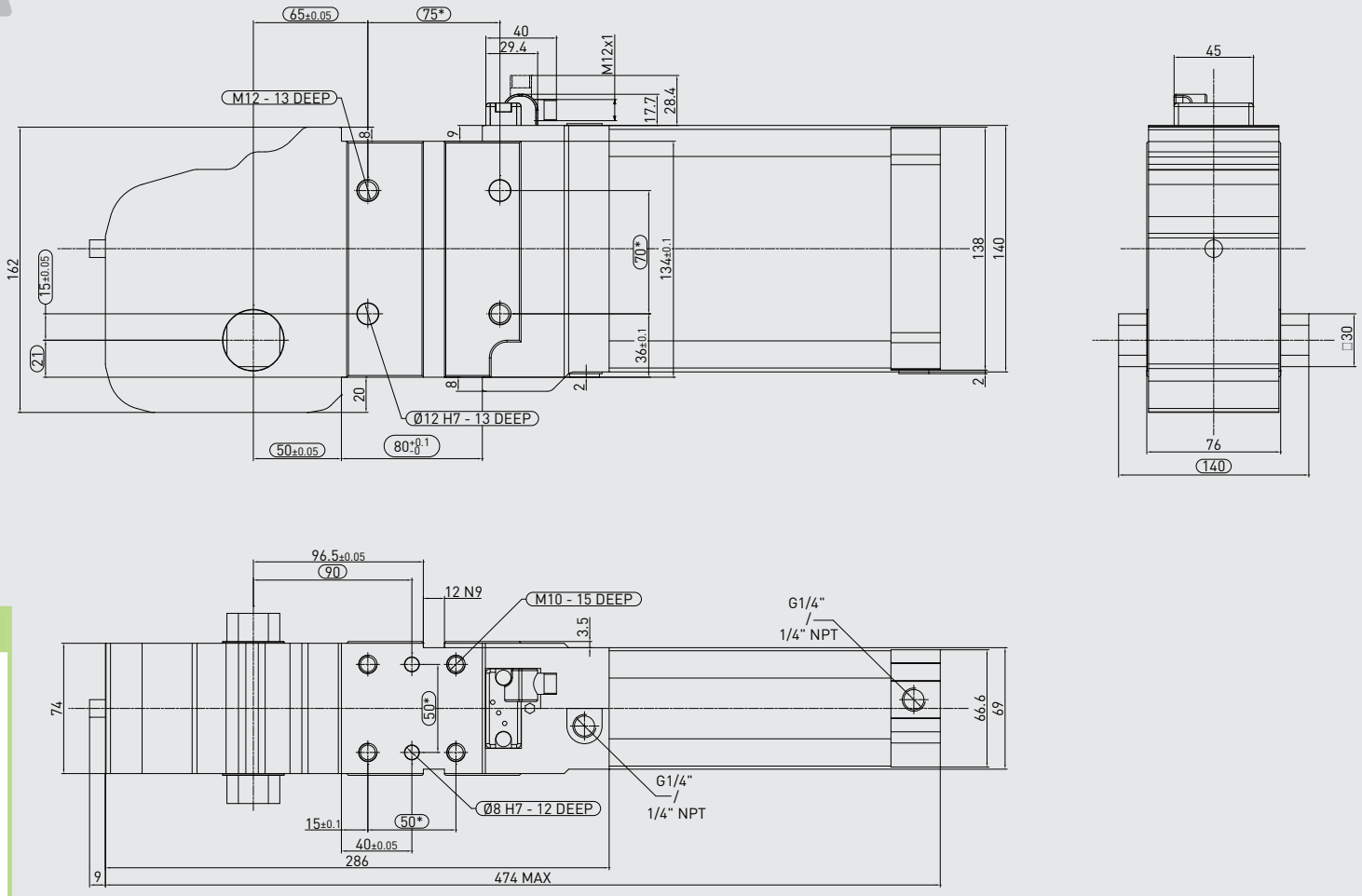

Technical features

Manual release button to open the linkage when air pressure is removed during setup. Pneumatic **ports on both sides** of the cylinder.	
Operating features	
Operating pressure	from 2 to 8 bar / from 30 to 115 psi
Lubrication	all the devices are lubricated for life at the factory. Inline air lubrication isn't required

Subject to change without notice

REV. 00 - 31/03/2015

0 mm OFFSET

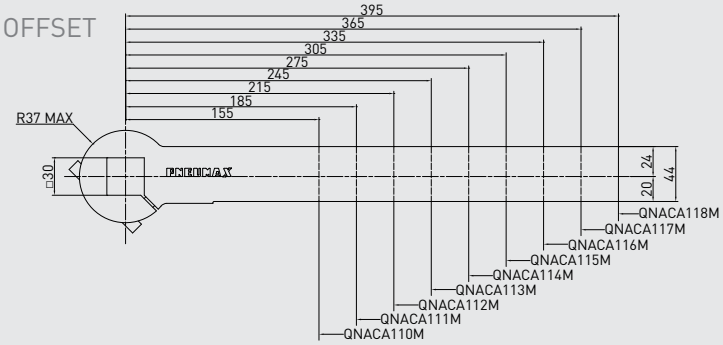

25 mm OFFSET

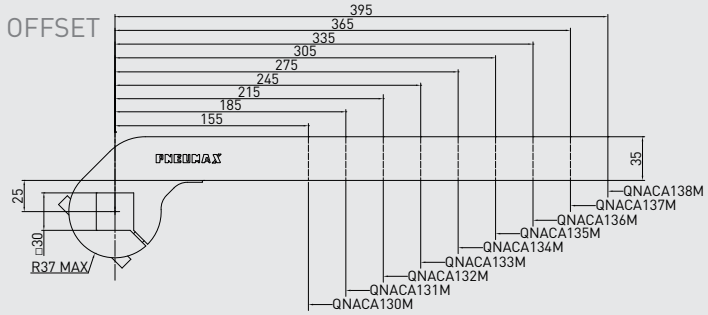

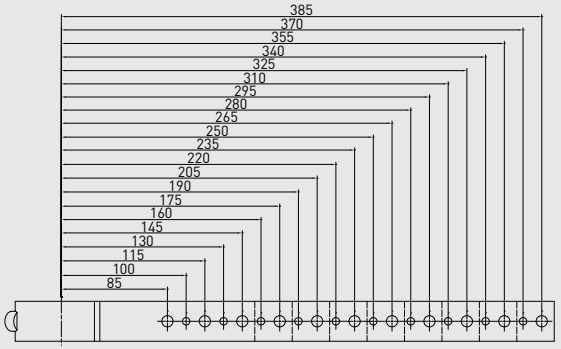

CLAMPING ARMS

30 mm shaft

Steel

30 mm shaft – 0 mm offset

PART NO.	MATERIAL	LENGTH	WEIGHT (kg)	MAX OP. ANGLE POS. 1	MAX OP. ANGLE POS. 2	MAX OP. ANGLE POS. 3	MAX OP. ANGLE POS. 4
QNACA110M	Steel	155	1.41	135°	135°	135°	135°
QNACA111M	Steel	185	1.58	135°	135°	135°	135°
QNACA112M	Steel	215	1.76	135°	135°	135°	135°
QNACA113M	Steel	245	1.93	135°	135°	135°	135°
QNACA114M	Steel	275	2.1	135°	135°	135°	135°
QNACA115M	Steel	305	2.27	135°	135°	135°	135°
QNACA116M	Steel	335	2.45	135°	135°	135°	135°
QNACA117M	Steel	365	2.62	135°	135°	135°	135°
QNACA118M	Steel	395	2.8	135°	135°	135°	135°

Screws: M10x20 **Tightening torque:** 50 N m / 36.87 lb·ft

30 mm shaft – 25 mm offset

PART NO.	MATERIAL	LENGTH	WEIGHT (kg)	MAX OP. ANGLE POS. 1	MAX OP. ANGLE POS. 2	MAX OP. ANGLE POS. 3	MAX OP. ANGLE POS. 4
QNACA130M	Steel	155	1.24	135°	135°	135°	135°
QNACA131M	Steel	185	1.39	135°	135°	135°	135°
QNACA132M	Steel	215	1.54	135°	135°	135°	135°
QNACA133M	Steel	245	1.69	135°	135°	135°	135°
QNACA134M	Steel	275	1.84	135°	135°	135°	135°
QNACA135M	Steel	305	2	135°	135°	135°	135°
QNACA136M	Steel	335	2.14	135°	135°	135°	135°
QNACA137M	Steel	365	2.29	135°	135°	135°	135°
QNACA138M	Steel	395	2.45	135°	135°	135°	135°

Screws: M10x20 **Tightening torque:** 50 N m / 36.87 lb·ft

Subject to change without notice

CLAMPING ARMS

30 mm shaft

Steel

REV. 00 - 31/03/2015

70 mm OFFSET

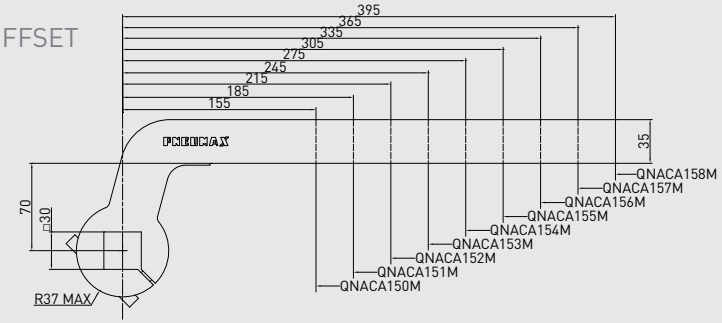

120 mm OFFSET

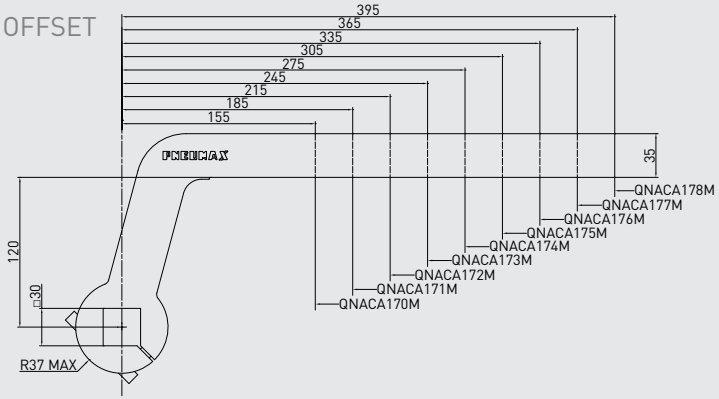

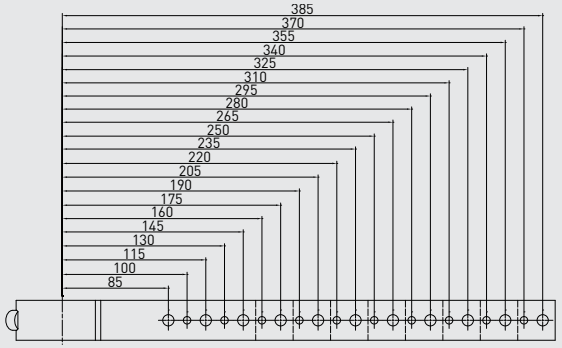

30 mm shaft – 70 mm offset

PART NO.	MATERIAL	LENGTH	WEIGHT (kg)	MAX OP. ANGLE POS. 1	MAX OP. ANGLE POS. 2	MAX OP. ANGLE POS. 3	MAX OP. ANGLE POS. 4
QNACA150M	Steel	155	1.7	135°	135°	135°	135°
QNACA151M	Steel	185	1.85	135°	135°	135°	135°
QNACA152M	Steel	215	2	135°	135°	135°	135°
QNACA153M	Steel	245	2.15	135°	135°	135°	135°
QNACA154M	Steel	275	2.3	135°	135°	135°	135°
QNACA155M	Steel	305	2.45	135°	135°	135°	135°
QNACA156M	Steel	335	2.6	135°	135°	135°	135°
QNACA157M	Steel	365	2.76	135°	135°	135°	135°
QNACA158M	Steel	395	2.92	135°	135°	135°	135°

Screws: M10x20 **Tightening torque:** 50 N m / 36.87 lb·ft

30 mm shaft – 120 mm offset

PART NO.	MATERIAL	LENGTH	WEIGHT (kg)	MAX OP. ANGLE POS. 1	MAX OP. ANGLE POS. 2	MAX OP. ANGLE POS. 3	MAX OP. ANGLE POS. 4
QNACA170M	Steel	155	1.97	135°	135°	135°	135°
QNACA171M	Steel	185	2.12	135°	135°	135°	135°
QNACA172M	Steel	215	2.27	135°	135°	135°	135°
QNACA173M	Steel	245	2.42	135°	135°	135°	135°
QNACA174M	Steel	275	2.57	135°	135°	135°	135°
QNACA175M	Steel	305	2.72	135°	135°	135°	135°
QNACA176M	Steel	335	2.87	135°	135°	135°	135°
QNACA177M	Steel	365	3.02	135°	135°	135°	135°
QNACA178M	Steel	395	3.19	135°	135°	135°	135°

Screws: M10x20 **Tightening torque:** 50 N m / 36.87 lb·ft

Subject to change without notice

FUNCTIONAL CHARTS
SIZE 80 mm

Clamping moment (at 5 bar / 72.5 psi)	850 N m / 626.92 lb·ft
Holding moment	2,500 N m / 1,843.90 lb·ft

The above data are meant for correct working conditions of the clamp – with the same performance level during its life time.

For applications which exceed the above data, please contact our sales representatives.

Material thickness compensation values and relative clamping force performance are available upon request: please get in touch with our sales representatives.

Calculation tool available upon demand

Please consult our technical representatives

Air consumption
Air consumption for complete cycle (opening and closing) REV. 00 - 31/03/2015

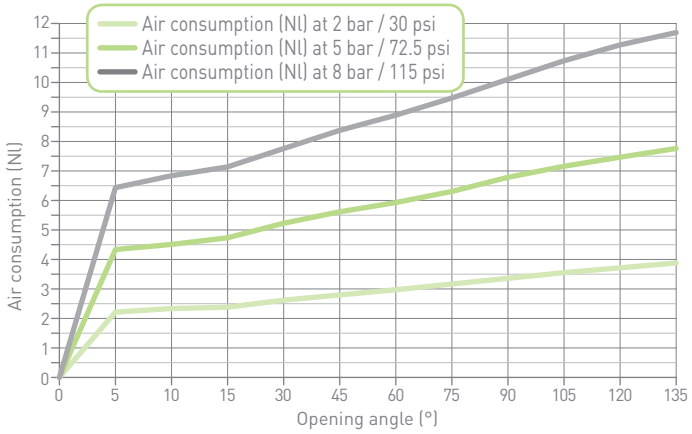

Tooling weight chart
5 bar operating pressure – 135° opening angle REV. 00 - 31/03/2015

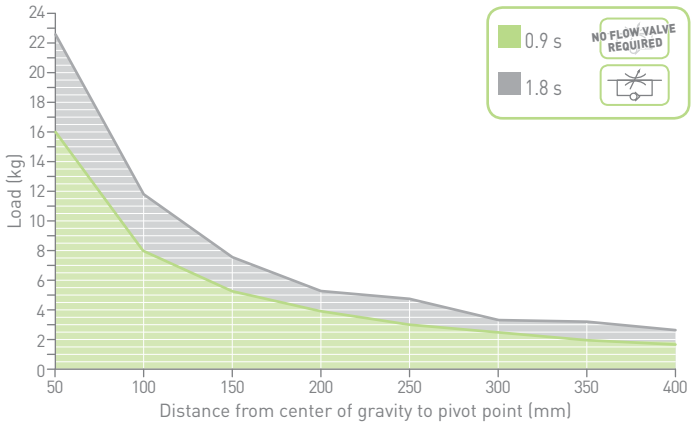

Subject to change without notice

HIGH EFFICIENCY
HE-SERIES

The €CO FRIENDLY clamps

Ecologic + Economic benefits

The perfect combination between **functionality** and **efficiency**: same clamping moment, same holding moment, same overall and functional dimensions, same load capacity of a standard clamp with European and NAAMS mounts available.

PATENTED

HIGH EFFICIENCY
HE-SERIES

- Air consumption saving up to **41%**
- Enhanced operational performances
- Complete clamps' range available, from size 40 to 80, with European and NAAMS mounts
- Less interference contours: the HE-series further minimizes any interfering or protruding contours in the design

WHY PNX

TECHNICAL BENEFITS
HE-SERIES

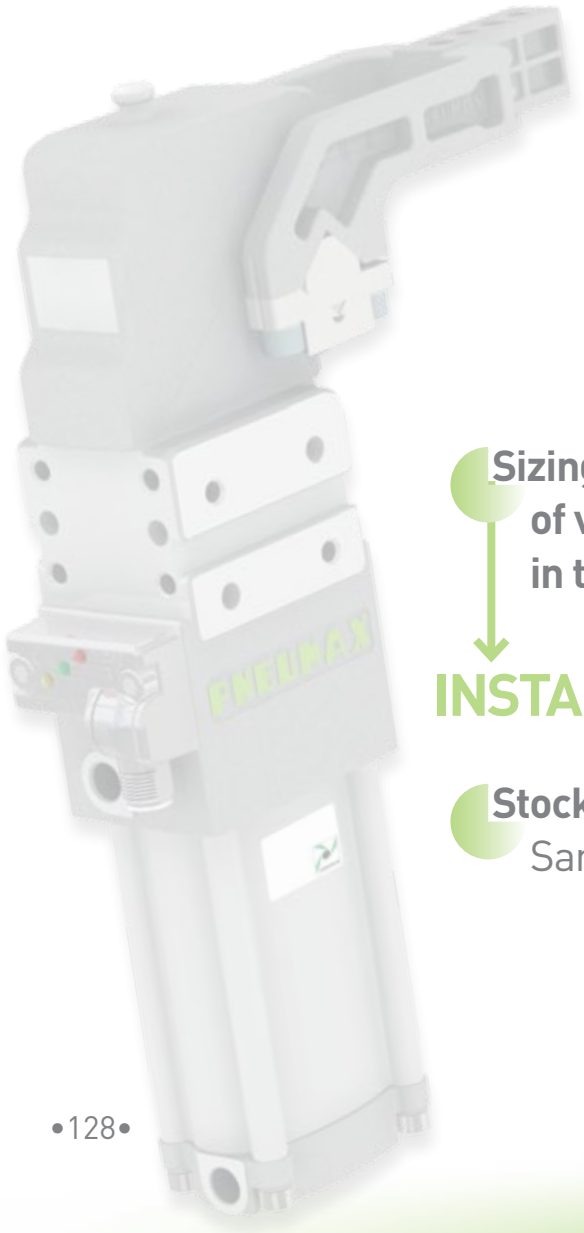

The HE-series combines compact dimensions, lightweight construction with superior strength

Considerable weight reduction when compared to competing eco-solutions

Sizing optimization of valves and fittings in the pneumatic circuit

No additional valve, neither any flow regulator required, unless slower activation time is desired

INSTALLATION COSTS AND SPACE SAVING

Stock optimization. One clamp at stock for all opening angles. Same sensor and same clamping arms as C-clamps

AIR SAVING COMPARISON

Complete cycle: 0°-135°-0°

Air cost: 0.026 € / Nm3

European average cost

900 g CO2/kWh

1 Kwh → 0.8 Nm^3

3 Mln cycles life span

	Clamp C_P80	High Efficiency clamp HE_P3
Housing	80 mm	80 mm
Cylinder	Ø 80 mm	Ø 63 mm
Clamping moment	850 N m / 626.92 lb·ft	850 N m / 626.92 lb·ft
	7.74 Nl/min	5.16 Nl/min

– 33.30%

Saving:

2.58 Nl/cycle
201.24 € saving
9,675 g CO^2 saving

	Clamp C_P63	High Efficiency clamp HE_P2
Housing	63 mm	63 mm
Cylinder	Ø 63 mm	Ø 50 mm
Clamping moment	390 N m / 287.64 lb·ft	390 N m / 287.64 lb·ft
	3.054 Nl/min	1.79 Nl/min

– 41.39%

Saving:

1.264 Nl/cycle
98.59 € saving
4,740 g CO^2 saving

WHY PNX

ECONOMIC ADVANTAGES
HE-SERIES

	Clamp C_P50	High Efficiency clamp HE_P1
Housing	50 mm	50 mm
Cylinder	Ø 50 mm	Ø 40 mm
Clamping moment	185 N m/136.44 lb·ft	185 N m/136.44 lb·ft
	1.69 Nl/min	1.09 Nl/min

– 35.50%

Saving:
0.6 Nl/cycle
46.80 € saving
2,250 g CO^2 saving

	Clamp C_P40	High Efficiency clamp HE_P0
Housing	40 mm	40 mm
Cylinder	Ø 40 mm	Ø 32 mm
Clamping moment	130 N m / 95.88 lb·ft	130 N m / 95.88 lb·ft
	0.98 Nl/min	0.69 Nl/min

– 29.60%

Saving:
0.29 Nl/cycle
22.62 € saving
1,087.5 g CO^2 saving

SAVING

- COMPRESSOR'S SIZING
- VALVES' AND MANIFOLDS' SIZING
- CO^2 EMISSIONS
- PIPING SIZING
- END EFFECTORS'AND TOOLINGS' SIZING (the clamps are lighter and more compact)

ORDERING STRING HE-SERIES

HE	1	P	1	E	G	1	A	01

VERSION
HE = High Efficiency clamp

MOUNTING PATTERN STANDARD
1 = European mount

OPERATION
P = pneumatic

SIZE
0 = housing size 40 / cylinder Ø 32 mm
1 = housing size 50 / cylinder Ø 40 mm
2 = housing size 63 / cylinder Ø 50 mm
3 = housing size 80 / cylinder Ø 63 mm

SENSOR
E = electronic sensor with M12 swivel connector - PNP
N = no sensor
A = electronic sensor with M12 swivel connector - NPN
B = electronic sensor with M8 swivel connector - PNP

PORTS
G = GAS
N = NPT

ARM MOUNT
1 =
2 =
3 =
4 =

ARM MATERIAL
A = aluminum
S = steel

CLAMP ARM TYPE
01 = wishbone, central, 15 mm offset, Ø 6H7*
02 = wishbone, right, 15 mm offset, Ø 6H7*
03 = wishbone, left, 15 mm offset, Ø 6H7*
04 = wishbone, central, 45 mm offset, Ø 6H7
05 = wishbone, right, 45 mm offset, Ø 6H7
06 = wishbone, left, 45 mm offset, Ø 6H7

Please see the charts in the datasheets for arm position as well as for max. opening angle

*for size 3 > 20 mm offset

Subject to change without notice

WEIGHT

kg
1.36

* DIMENSIONAL TOLERANCE FOR DOWEL HOLES: ±0.02
DIMENSIONAL TOLERANCE FOR THREADED HOLES: ±0.1

REV. 00 - 02/10/2015

HE1P0E

High Efficiency clamp
European std
Housing size 40/
cylinder Ø 32 mm

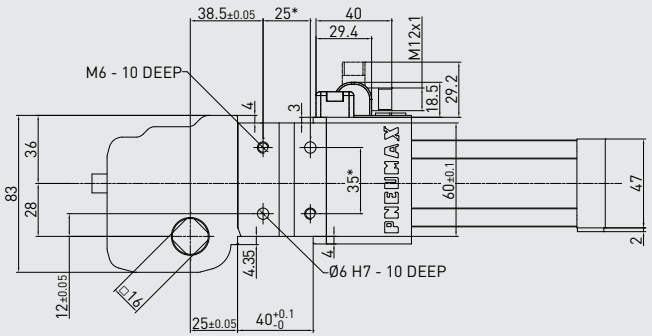

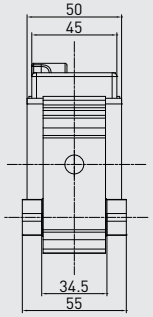

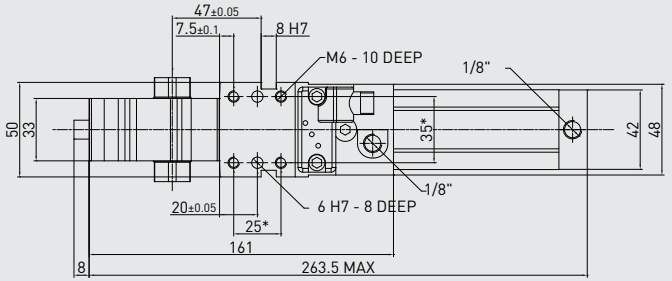

Technical features

Manual release button to open the linkage when air pressure is removed during setup. Pneumatic **ports on both sides** of the cylinder.	
Operating features	
Operating pressure	from 2 to 8 bar / from 30 to 115 psi
Lubrication	all the devices are lubricated for life at the factory. Inline air lubrication isn't required

Subject to change
without notice

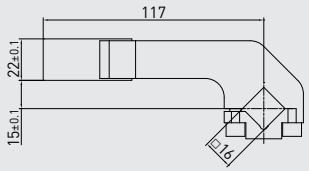

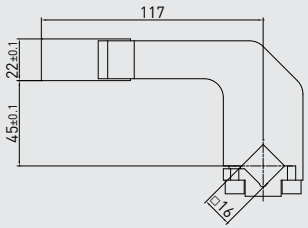

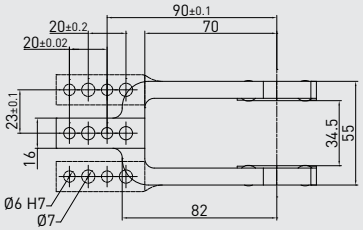

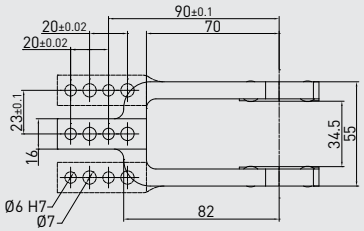

CLAMPING ARMS

16 mm shaft

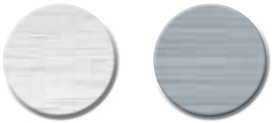

See "Special arm types" under the Accessories section at p. 236

16 mm shaft – 15 mm offset

PART NO.	MATERIAL	VERSION	WEIGHT (kg)	MAX OP. ANGLE POS. 1	MAX OP. ANGLE POS. 2	MAX OP. ANGLE POS. 3	MAX OP. ANGLE POS. 4
B1601	Aluminum	Central	0.24	135°	135°	N/A	45°
Q1601	Steel	Central	0.44	135°	135°	N/A	45°
B1602	Aluminum	Right	0.24	135°	135°	N/A	45°
Q1602	Steel	Right	0.46	135°	135°	N/A	45°
B1603	Aluminum	Left	0.24	135°	135°	N/A	45°
Q1603	Steel	Left	0.46	135°	135°	N/A	45°

Screws: M6x20 **Tightening torque:** 10 N m / 7.37 lb·ft

16 mm shaft – 45 mm offset

PART NO.	MATERIAL	VERSION	WEIGHT (kg)	MAX OP. ANGLE POS. 1	MAX OP. ANGLE POS. 2	MAX OP. ANGLE POS. 3	MAX OP. ANGLE POS. 4
B1604	Aluminum	Central	0.3	135°	135°	N/A	N/A
Q1604	Steel	Central	0.55	135°	135°	N/A	N/A
B1605	Aluminum	Right	0.3	135°	135°	N/A	N/A
Q1605	Steel	Right	0.57	135°	135°	N/A	N/A
B1606	Aluminum	Left	0.3	135°	135°	N/A	N/A
Q1606	Steel	Left	0.57	135°	135°	N/A	N/A

Screws: M6x20 **Tightening torque:** 10 N m / 7.37 lb·ft

Subject to change without notice

FUNCTIONAL CHARTS
HE1P0E

Cycle time for max stroke	< 0.8 s NO FLOW VALVE REQUIRED

Clamping moment (at 5 bar / 72.5 psi)	130 N m / 95.88 lb·ft
Holding moment	380 N m / 280.27 lb·ft

The above data are meant for correct working conditions of the clamp – with the same performance level during its life time.

For applications which exceed the above data, please contact our sales representatives.

Air consumption

Air consumption for complete cycle (opening and closing) REV. 00 - 21/01/2016

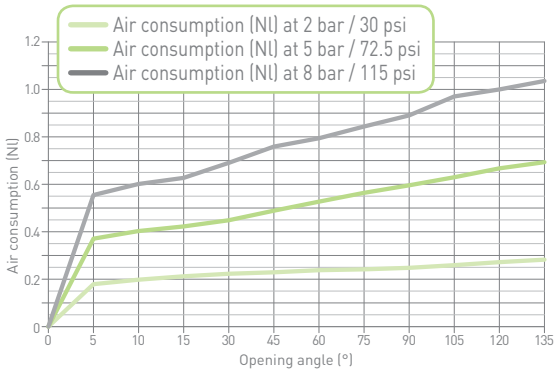

Tooling weight chart

5 bar operating pressure – 135° opening angle REV. 00 - 17/06/2015

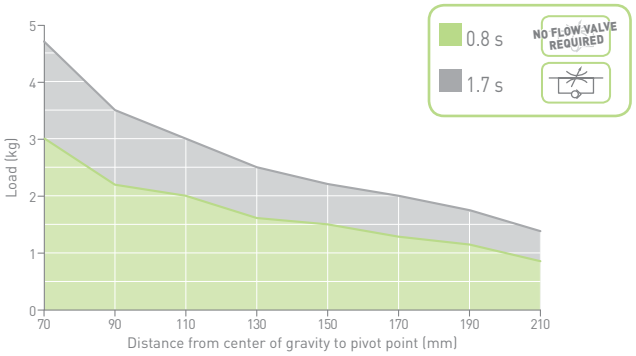

Calculation tool available upon demand

Please consult our technical representatives

Subject to change without notice

* DIMENSIONAL TOLERANCE FOR DOWEL HOLES: ±0.02
DIMENSIONAL TOLERANCE FOR THREADED HOLES: ±0.1

REV. 01 - 14/02/2018

WEIGHT

kg 2.53

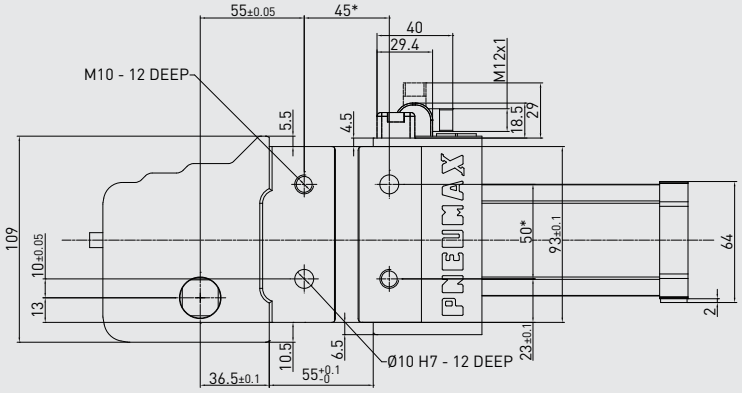

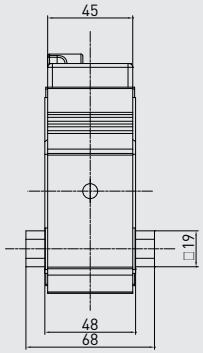

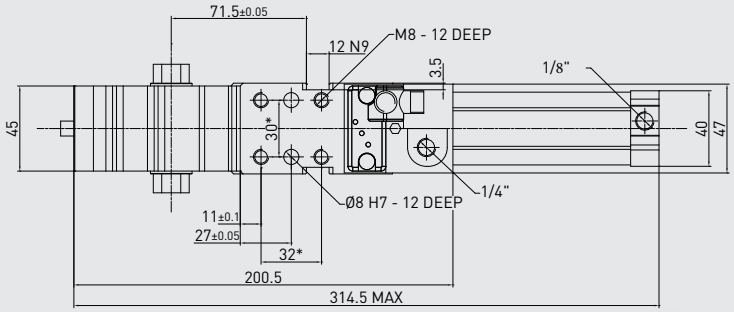

HE1P1E

High Efficiency clamp
European std
Housing size 50/
cylinder Ø 40 mm

Technical features

Manual release button to open the linkage when air pressure is removed during setup. Pneumatic **ports on both sides** of the cylinder.	
Operating features	
Operating pressure	from 2 to 8 bar / from 30 to 115 psi
Lubrication	all the devices are lubricated for life at the factory. Inline air lubrication isn't required

Subject to change
without notice

CLAMPING ARMS

19 mm shaft

See "Special arm types" under the Accessories section at p. 236

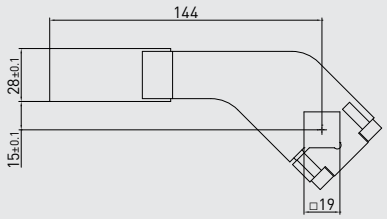

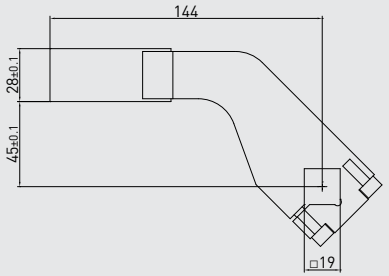

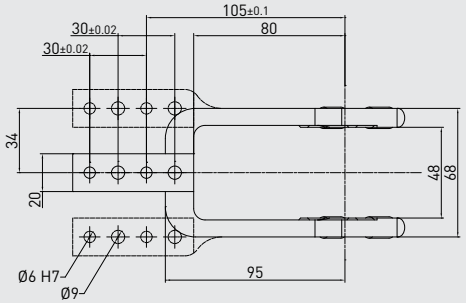

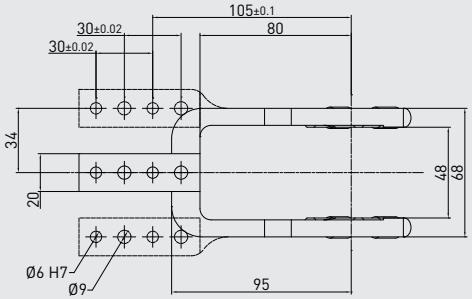

19 mm shaft – 15 mm offset

PART NO.	MATERIAL	VERSION	WEIGHT (kg)	MAX OP. ANGLE POS. 1	MAX OP. ANGLE POS. 2	MAX OP. ANGLE POS. 3	MAX OP. ANGLE POS. 4
B1901	Aluminum	Central	0.41	135°	115°	135°	80°
Q1901	Steel	Central	0.71	135°	115°	135°	80°
B1902	Aluminum	Right	0.43	135°	115°	135°	80°
Q1902	Steel	Right	0.79	135°	115°	135°	80°
B1903	Aluminum	Left	0.43	135°	115°	135°	80°
Q1903	Steel	Left	0.79	135°	115°	135°	80°

Screws: M6x25 **Tightening torque:** 10 N m

19 mm shaft – 45 mm offset

PART NO.	MATERIAL	VERSION	WEIGHT (kg)	MAX OP. ANGLE POS. 1	MAX OP. ANGLE POS. 2	MAX OP. ANGLE POS. 3	MAX OP. ANGLE POS. 4
B1904	Aluminum	Central	0.45	135°	135°	135°	80°
Q1904	Steel	Central	0.77	135°	135°	135°	80°
B1905	Aluminum	Right	0.46	135°	135°	135°	80°
Q1905	Steel	Right	0.81	135°	135°	135°	80°
B1906	Aluminum	Left	0.46	135°	135°	135°	80°
Q1906	Steel	Left	0.81	135°	135°	135°	80°

Screws: M6x25 **Tightening torque:** 10 N m

Subject to change without notice

FUNCTIONAL CHARTS
HE1P1E

Cycle time for max stroke	< 0.8 s NO FLOW VALVE REQUIRED

Clamping moment (at 5 bar / 72.5 psi)	185 N m / 136.44 lb·ft
Holding moment	800 N m / 590.04 lb·ft

The above data are meant for correct working conditions of the clamp – with the same performance level during its life time.
For applications which exceed the above data, please contact our sales representatives.

Air consumption

Air consumption for complete cycle (opening and closing) REV. 00 - 31/03/2015

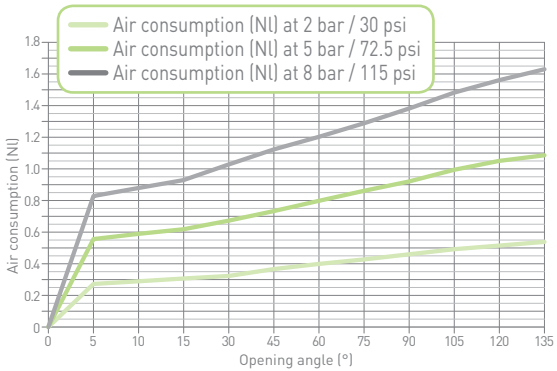

Tooling weight chart

5 bar operating pressure – 135° opening angle REV. 00 - 17/06/2015

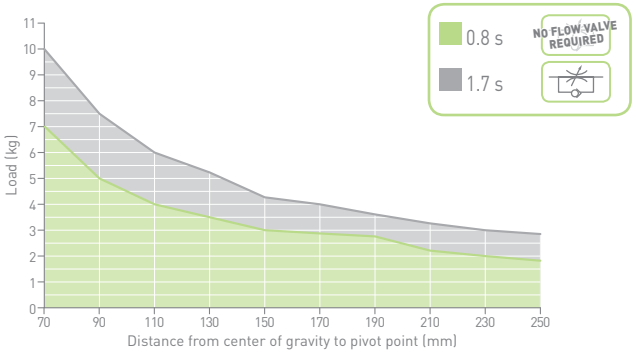

Calculation tool available upon demand

Please consult our technical representatives

Subject to change without notice

HE1P2E

High Efficiency clamp
European std
Housing size 63/
cylinder Ø 50 mm

WEIGHT

kg
3.3

* DIMENSIONAL TOLERANCE FOR DOWEL HOLES: ±0.02
DIMENSIONAL TOLERANCE FOR THREADED HOLES: ±0.1

REV. 00 - 31/03/2015

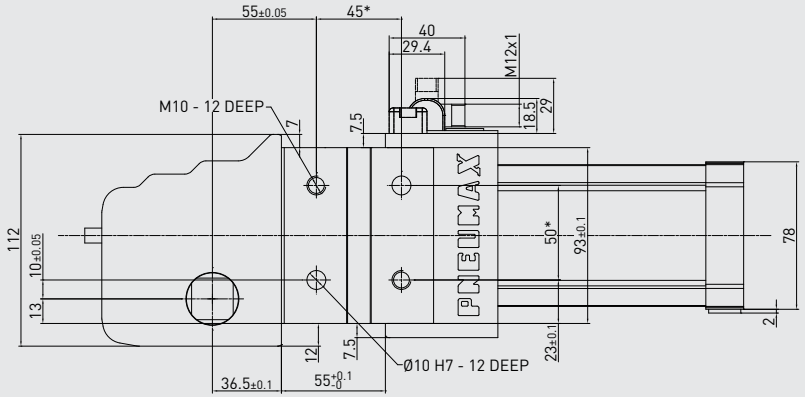

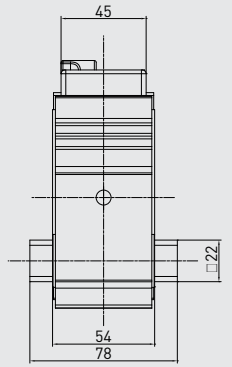

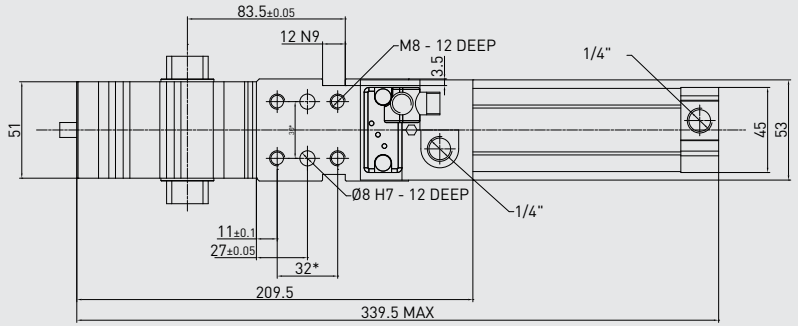

Technical features

Manual release button to open the linkage when air pressure is removed during setup. Pneumatic **ports on both sides** of the cylinder.	
Operating features	
Operating pressure	from 2 to 8 bar / from 30 to 115 psi
Lubrication	all the devices are lubricated for life at the factory. Inline air lubrication isn't required

Subject to change
without notice

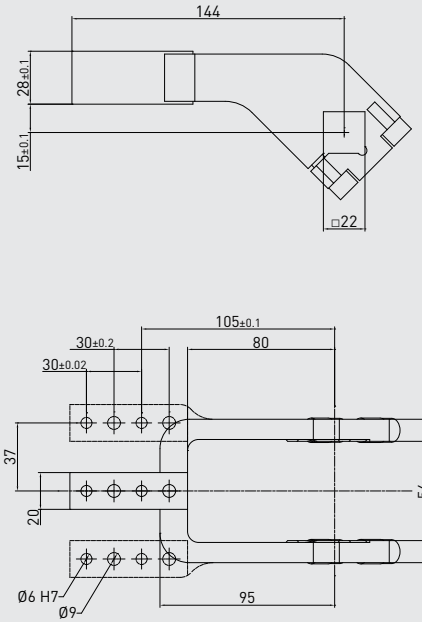

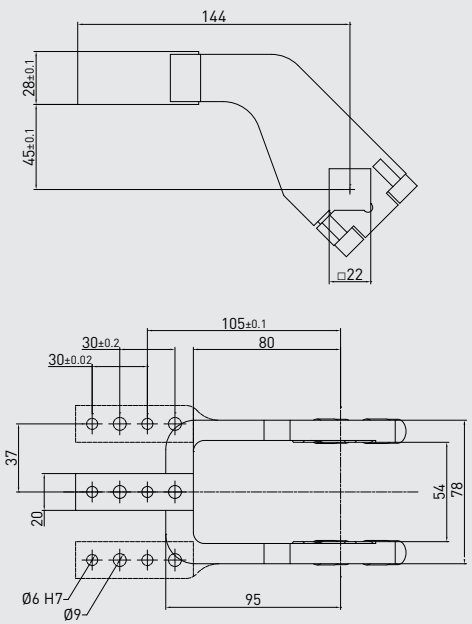

CLAMPING ARMS

22 mm shaft

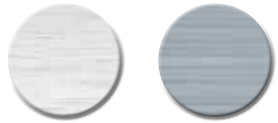

Aluminum Steel

See "Special arm types" under the Accessories section at p. 236

22 mm shaft – 15 mm offset

PART NO.	MATERIAL	VERSION	WEIGHT (kg)	MAX OP. ANGLE POS. 1	MAX OP. ANGLE POS. 2	MAX OP. ANGLE POS. 3	MAX OP. ANGLE POS. 4
B2201	Aluminum	Central	0.52	135°	115°	135°	80°
Q2201	Steel	Central	0.9	135°	115°	135°	80°
B2202	Aluminum	Right	0.54	135°	115°	135°	80°
Q2202	Steel	Right	0.93	135°	115°	135°	80°
B2203	Aluminum	Left	0.54	135°	115°	135°	80°
Q2203	Steel	Left	0.93	135°	115°	135°	80°

Screws: M8x25 **Tightening torque:** 25 N m

22 mm shaft – 45 mm offset

PART NO.	MATERIAL	VERSION	WEIGHT (kg)	MAX OP. ANGLE POS. 1	MAX OP. ANGLE POS. 2	MAX OP. ANGLE POS. 3	MAX OP. ANGLE POS. 4
B2204	Aluminum	Central	0.57	135°	135°	135°	75°
Q2204	Steel	Central	0.98	135°	135°	135°	75°
B2205	Aluminum	Right	0.58	135°	135°	135°	75°
Q2205	Steel	Right	1.02	135°	135°	135°	75°
B2206	Aluminum	Left	0.58	135°	135°	135°	75°
Q2206	Steel	Left	1.02	135°	135°	135°	75°

Screws: M8x25 **Tightening torque:** 25 N m

Subject to change without notice

FUNCTIONAL CHARTS
HE1P2E

Cycle time for max stroke	< 0.8 s NO FLOW VALVE REQUIRED

Clamping moment (at 5 bar / 72.5 psi)	390 N m / 287.64 lb·ft
Holding moment	1500 N m / 1106.34 lb·ft

The above data are meant for correct working conditions of the clamp – with the same performance level during its life time.
For applications which exceed the above data, please contact our sales representatives.

Air consumption
Air consumption for complete cycle (opening and closing) REV. 00 - 31/03/2015

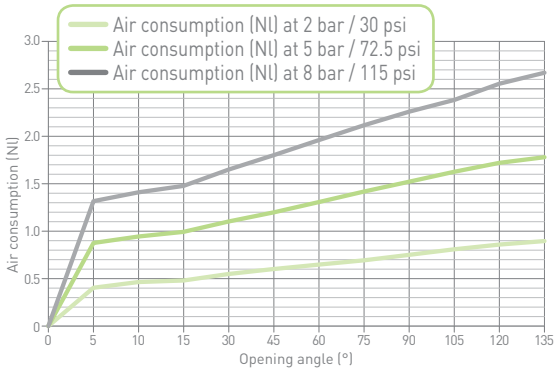

Tooling weight chart
5 bar operating pressure – 135° opening angle REV. 00 - 17/06/2015

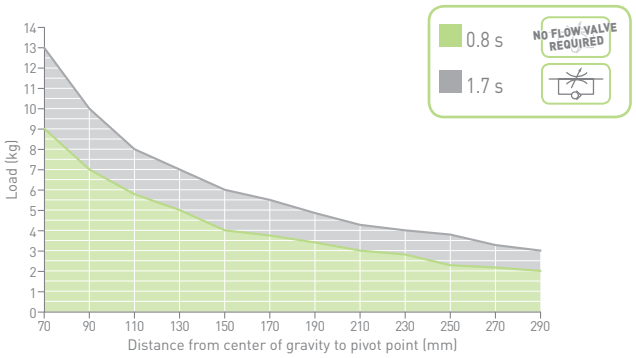

Calculation tool available upon demand

Please consult our technical representatives

Subject to change without notice

* DIMENSIONAL TOLERANCE FOR DOWEL HOLES: ±0.02
DIMENSIONAL TOLERANCE FOR THREADED HOLES: ±0.1

REV. 00 - 20/10/2015

WEIGHT

kg 7.55

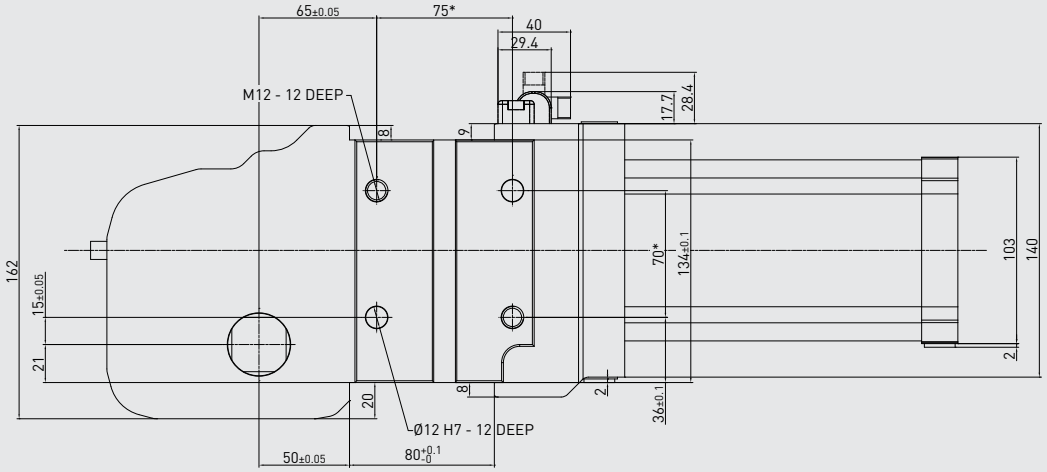

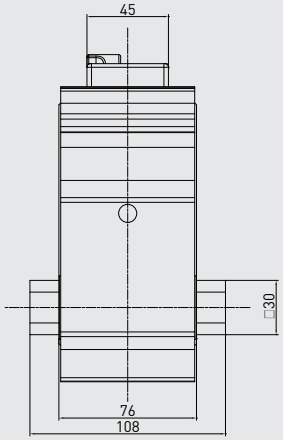

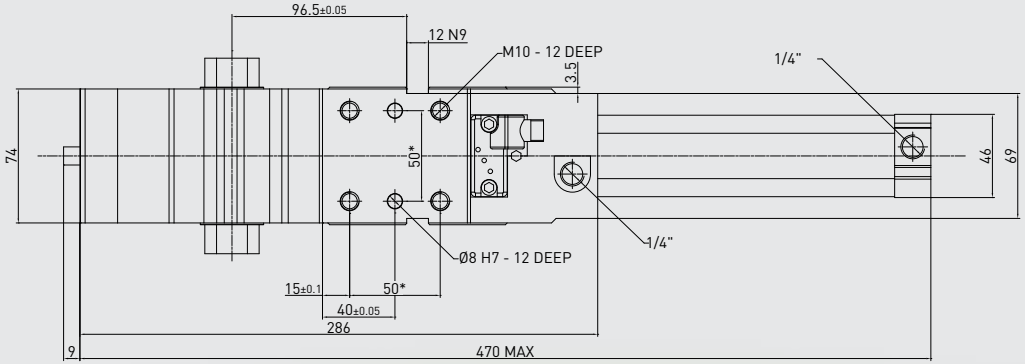

HE1P3E

High Efficiency clamp
European std
Housing size 80/
cylinder Ø 63 mm

Technical features

Manual release button to open the linkage when air pressure is removed during setup. Pneumatic **ports on both sides** of the cylinder.	
Operating features	
Operating pressure	from 2 to 8 bar / from 30 to 115 psi
Lubrication	all the devices are lubricated for life at the factory. Inline air lubrication isn't required

Subject to change without notice

CLAMPING ARMS

30 mm shaft

Aluminum

See "Special arm types" under the Accessories section at p. 236

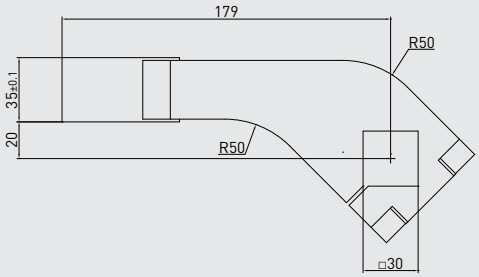

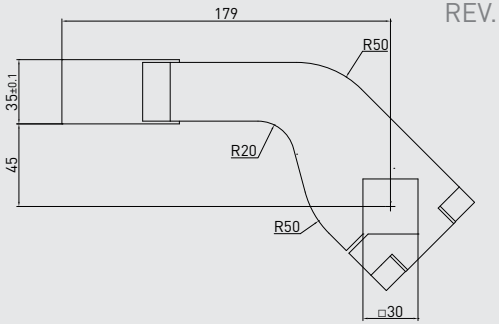

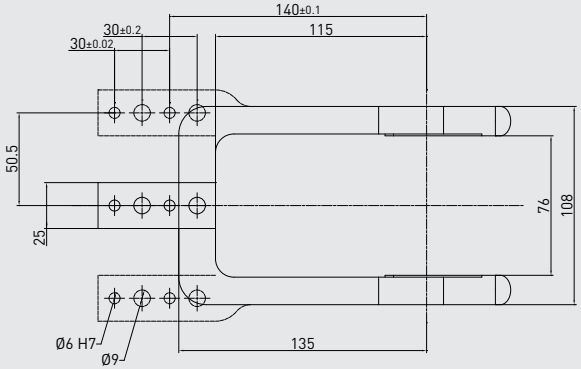

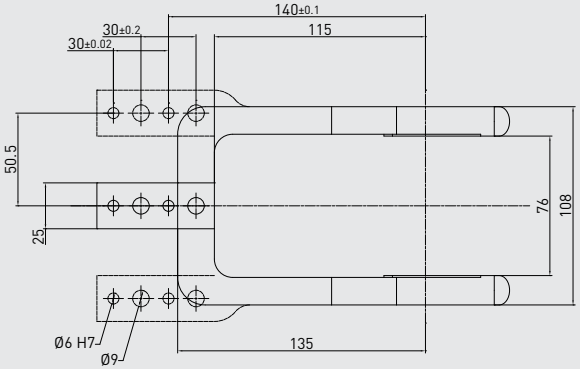

30 mm shaft – 20 mm offset

PART NO.	MATERIAL	VERSION	WEIGHT (kg)	MAX OP. ANGLE POS. 1	MAX OP. ANGLE POS. 2	MAX OP. ANGLE POS. 3	MAX OP. ANGLE POS. 4
B3001	Aluminum	Central	1.1	135°	110°	135°	75°
B3002	Aluminum	Right	1.15	135°	110°	135°	75°
B3003	Aluminum	Left	1.15	135°	110°	135°	75°

Screws: M10x35 **Tightening torque:** 35 N m / 25.81 lb·ft

30 mm shaft – 45 mm offset

PART NO.	MATERIAL	VERSION	WEIGHT (kg)	MAX OP. ANGLE POS. 1	MAX OP. ANGLE POS. 2	MAX OP. ANGLE POS. 3	MAX OP. ANGLE POS. 4
B3004	Aluminum	Central	1.18	135°	110°	135°	75°
B3005	Aluminum	Right	1.2	135°	110°	135°	75°
B3006	Aluminum	Left	1.2	135°	110°	135°	75°

Screws: M10x35 **Tightening torque:** 35 N m / 25.81 lb·ft

Subject to change without notice

FUNCTIONAL CHARTS
HE1P3E

Cycle time for max stroke	< 0.9 s NO FLOW VALVE REQUIRED

Clamping moment (at 5 bar / 72.5 psi)	850 N m / 626.92 lb·ft
Holding moment	2500 N m / 1843.90 lb·ft

The above data are meant for correct working conditions of the clamp – with the same performance level during its life time.

For applications which exceed the above data, please contact our sales representatives.

Air consumption

Air consumption for complete cycle (opening and closing) REV. 00 - 21/01/2016

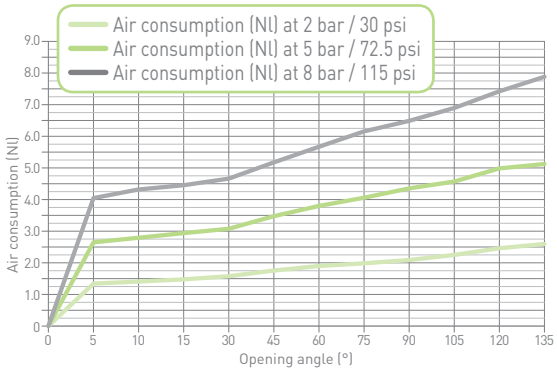

Tooling weight chart

5 bar operating pressure – 135° opening angle REV. 00 - 17/06/2015

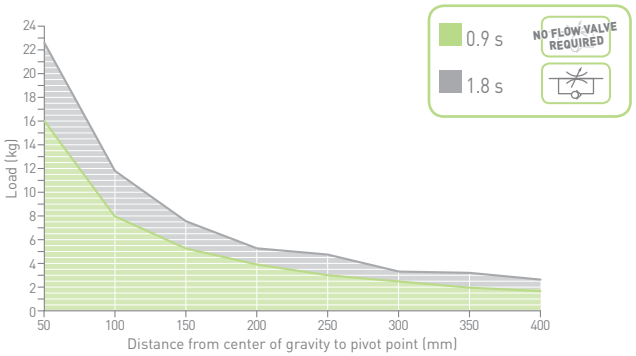

Calculation tool available upon demand

Please consult our technical representatives

Subject to change without notice

ORDERING STRING HE-SERIES

HE 2 P 2 E G L

VERSION
HE = High Efficiency clamp

MOUNTING PATTERN STANDARD
2 = NAAMS mount

NAAMS

OPERATION
P = pneumatic

SIZE
1 = housing size 50 / cylinder Ø 40 mm
2 = housing size 63 / cylinder Ø 50 mm
3 = housing size 80 / cylinder Ø 63 mm

SENSOR
E = electronic sensor with M12 swivel connector - PNP
N = no sensor
A = electronic sensor with M12 swivel connector - NPN
B = electronic sensor with M8 swivel connector - PNP

PORTS
G = GAS
N = NPT

ARM MOUNT
1 =
2 =
3 =
4 =

SHAFT OUTPUT
_ = dual output
L = single output - LEFT
R = single output - RIGHT

Please see the charts in the datasheets for arm position as well as for max. opening angle

NAAMS clamping arms to be ordered separately

*for size 3 > 20 mm offset

Subject to change without notice

* DIMENSIONAL TOLERANCE FOR DOWEL HOLES: ±0.02
DIMENSIONAL TOLERANCE FOR THREADED HOLES: ±0.1

REV. 01 - 14/02/2018

WEIGHT

kg 2.5

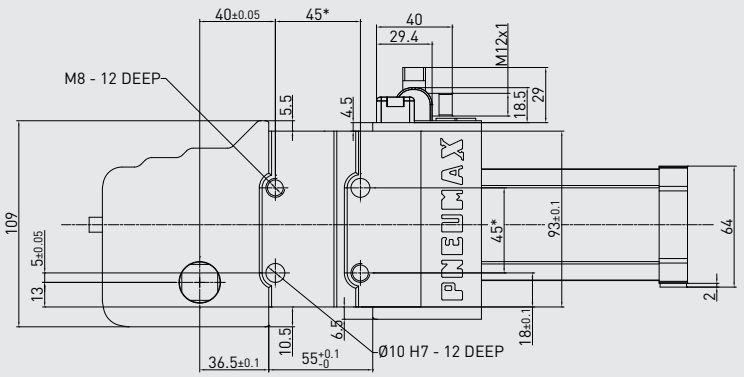

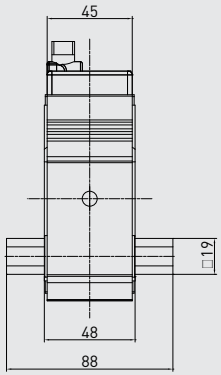

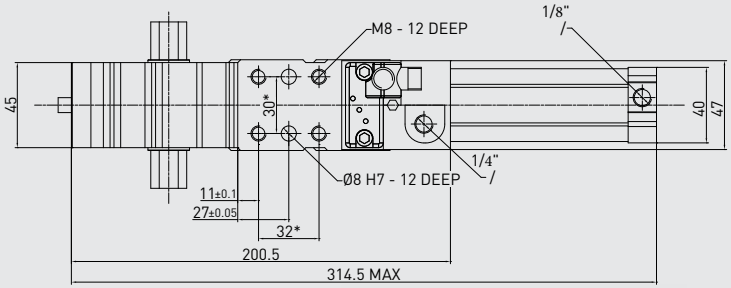

NAAMS GLOBAL STANDARDS COMPONENTS

HE2P1E

High Efficiency clamp
NAAMS std
Housing size 50/
cylinder Ø 40 mm

Technical features

Manual release button to open the linkage when air pressure is removed during setup. Pneumatic **ports on both sides** of the cylinder.	
Operating features	
Operating pressure	from 2 to 8 bar / from 30 to 115 psi
Lubrication	all the devices are lubricated for life at the factory. Inline air lubrication isn't required

Subject to change without notice

NAAMS

CLAMPING ARMS

19 mm shaft

Steel

0 mm OFFSET

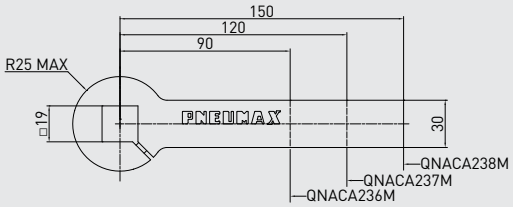

25 mm OFFSET

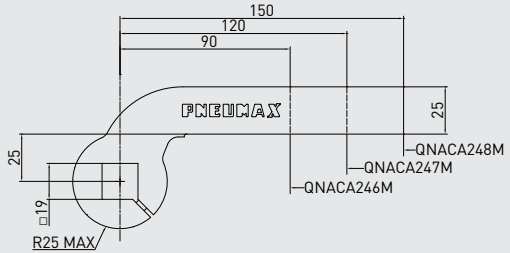

50 mm OFFSET

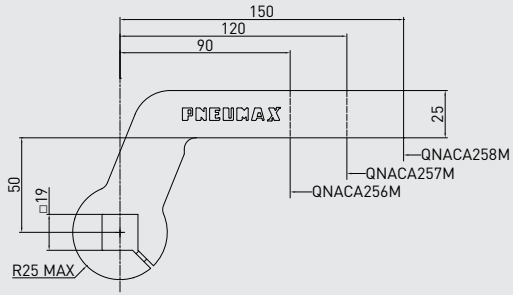

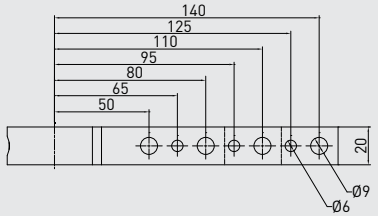

19 mm shaft – 0 mm offset

PART NO.	MATERIAL	LENGTH	WEIGHT (kg)	MAX OP. ANGLE POS. 1	MAX OP. ANGLE POS. 2	MAX OP. ANGLE POS. 3	MAX OP. ANGLE POS. 4
QNACA236M	Steel	90	0.4	135°	135°	135°	135°
QNACA237M	Steel	120	0.49	135°	135°	135°	135°
QNACA238M	Steel	150	0.58	135°	135°	135°	135°

Screws: M6x25 **Tightening torque:** 10 N m / 7.37 lb·ft

19 mm shaft – 25 mm offset

PART NO.	MATERIAL	LENGTH	WEIGHT (kg)	MAX OP. ANGLE POS. 1	MAX OP. ANGLE POS. 2	MAX OP. ANGLE POS. 3	MAX OP. ANGLE POS. 4
QNACA246M	Steel	90	0.44	135°	135°	135°	135°
QNACA247M	Steel	120	0.52	135°	135°	135°	135°
QNACA248M	Steel	150	0.6	135°	135°	135°	135°

Screws: M6x25 **Tightening torque:** 10 N m / 7.37 lb·ft

19 mm shaft – 50 mm offset

PART NO.	MATERIAL	LENGTH	WEIGHT (kg)	MAX OP. ANGLE POS. 1	MAX OP. ANGLE POS. 2	MAX OP. ANGLE POS. 3	MAX OP. ANGLE POS. 4
QNACA256M	Steel	90	0.52	135°	135°	135°	135°
QNACA257M	Steel	120	0.6	135°	135°	135°	135°
QNACA258M	Steel	150	0.68	135°	135°	135°	135°

Screws: M6x25 **Tightening torque:** 10 N m / 7.37 lb·ft

Subject to change without notice

FUNCTIONAL CHARTS
HE2P1E

Cycle time for max stroke	< 0.8 s NO FLOW VALVE REQUIRED

Clamping moment (at 5 bar / 72.5 psi)	185 N m / 136.44 lb·ft
Holding moment	800 N m / 590.04 lb·ft

The above data are meant for correct working conditions of the clamp – with the same performance level during its life time.
For applications which exceed the above data, please contact our sales representatives.

Air consumption
Air consumption for complete cycle (opening and closing) REV. 00 - 31/03/2015

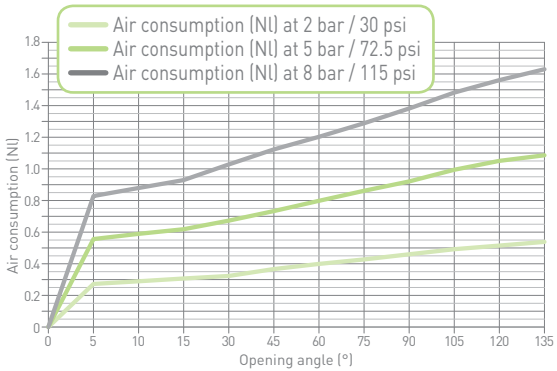

Tooling weight chart
5 bar operating pressure – 135° opening angle REV. 00 - 17/06/2015

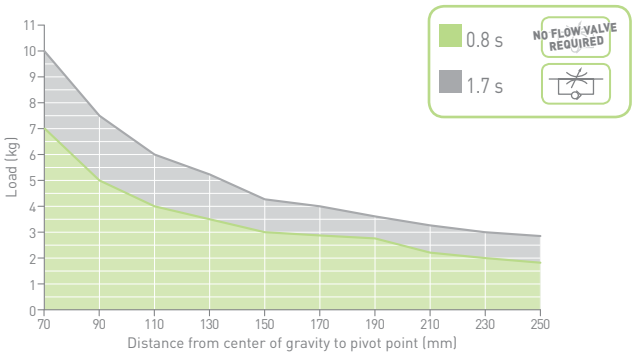

Calculation tool available upon demand

Please consult our technical representatives

Subject to change without notice

WEIGHT

kg
2.8

* DIMENSIONAL TOLERANCE FOR DOWEL HOLES: ±0.02
DIMENSIONAL TOLERANCE FOR THREADED HOLES: ±0.1

REV. 00 - 02/10/2015

GLOBAL STANDARD COMPONENTS
NAAMS

HE2P2E

High Efficiency clamp
NAAMS std
Housing size 63/
cylinder Ø 50 mm

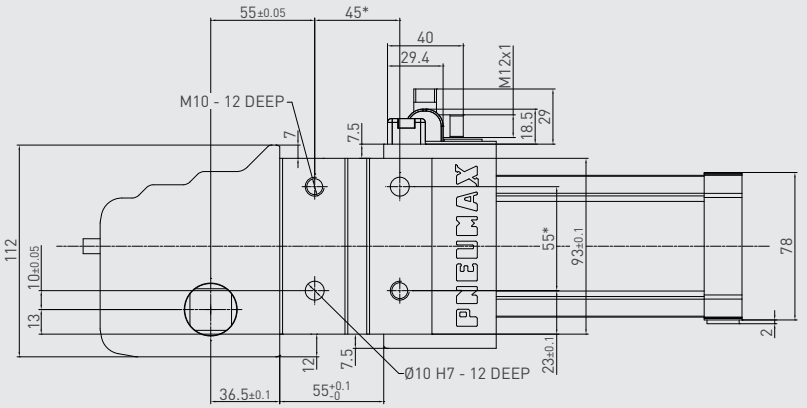

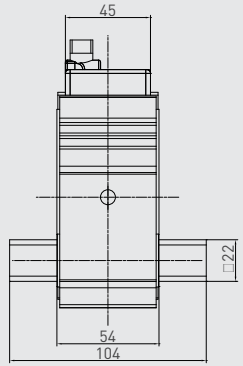

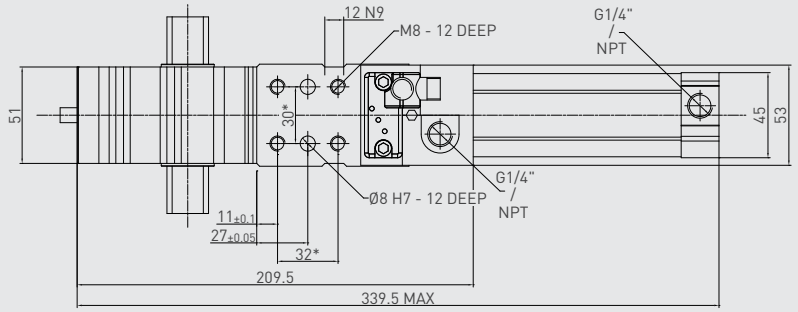

Technical features

Manual release button to open the linkage when air pressure is removed during setup. Pneumatic **ports on both sides** of the cylinder.	
Operating features	
Operating pressure	from 2 to 8 bar / from 30 to 115 psi
Lubrication	all the devices are lubricated for life at the factory. Inline air lubrication isn't required

Subject to change
without notice

REV. 01 - 31/07/2015

0 mm OFFSET

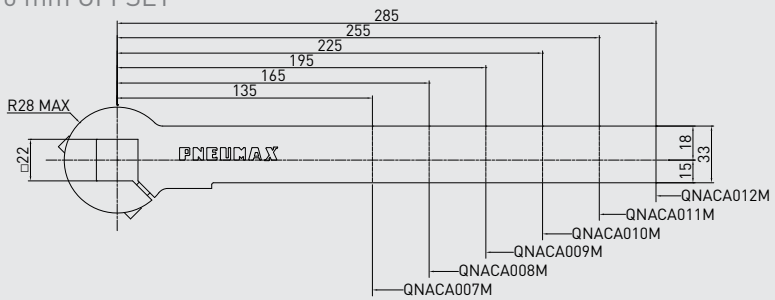

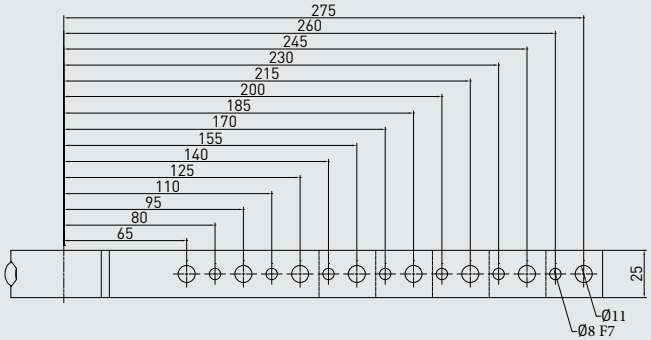

25 mm OFFSET

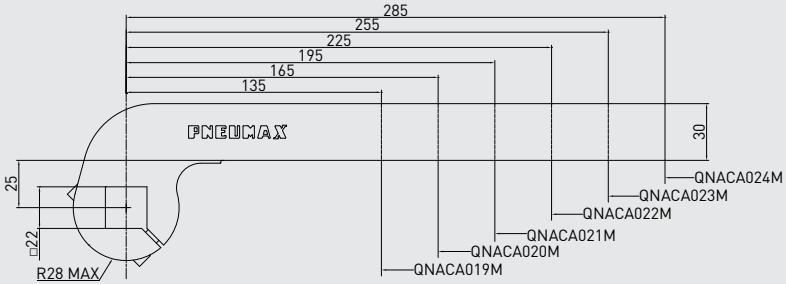

GLOBAL STANDARD COMPONENTS NAAMS

CLAMPING ARMS

22 mm shaft

Steel

22 mm shaft – 0 mm offset

PART NO.	MATERIAL	LENGTH	WEIGHT (kg)	MAX OP. ANGLE POS. 1	MAX OP. ANGLE POS. 2	MAX OP. ANGLE POS. 3	MAX OP. ANGLE POS. 4
QNACA007M	Steel	135	0.72	135°	135°	135°	135°
QNACA008M	Steel	165	0.83	135°	135°	135°	135°
QNACA009M	Steel	195	0.94	135°	135°	135°	135°
QNACA010M	Steel	225	1.05	135°	135°	135°	135°
QNACA011M	Steel	255	1.16	135°	135°	135°	135°
QNACA012M	Steel	285	1.28	135°	135°	135°	135°

Screws: M8x18 **Tightening torque:** 25 N m / 18.43 lb·ft

NAAMS

22 mm shaft – 25 mm offset

PART NO.	MATERIAL	LENGTH	WEIGHT (kg)	MAX OP. ANGLE POS. 1	MAX OP. ANGLE POS. 2	MAX OP. ANGLE POS. 3	MAX OP. ANGLE POS. 4
QNACA019M	Steel	135	0.84	135°	135°	135°	135°
QNACA020M	Steel	165	0.95	135°	135°	135°	135°
QNACA021M	Steel	195	1.05	135°	135°	135°	135°
QNACA022M	Steel	225	1.16	135°	135°	135°	135°
QNACA023M	Steel	255	1.26	135°	135°	135°	135°
QNACA024M	Steel	285	1.37	135°	135°	135°	135°

Screws: M8x18 **Tightening torque:** 25 N m / 18.43 lb·ft

NAAMS

GLOBAL STANDARD COMPONENTS
NAAMS

CLAMPING ARMS

22 mm shaft

Steel

70 mm OFFSET

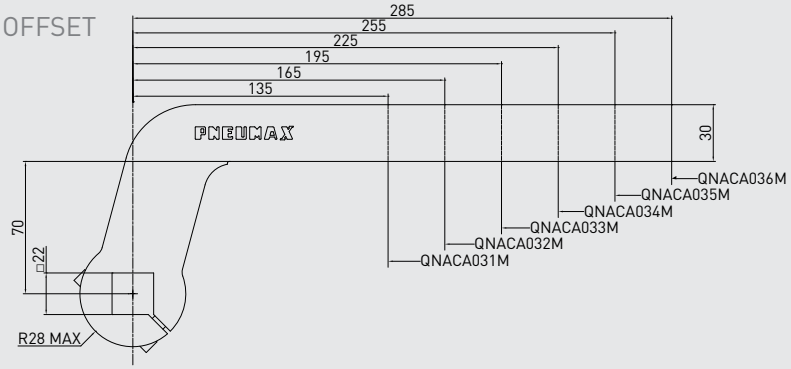

120 mm OFFSET

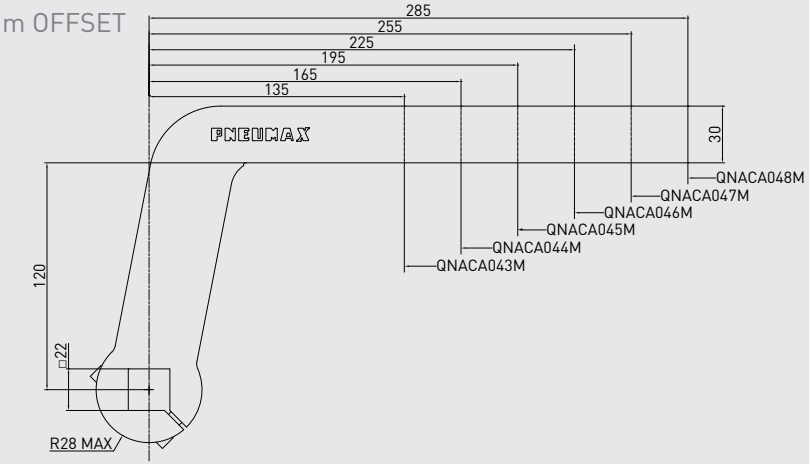

REV. 00 - 31/03/2015

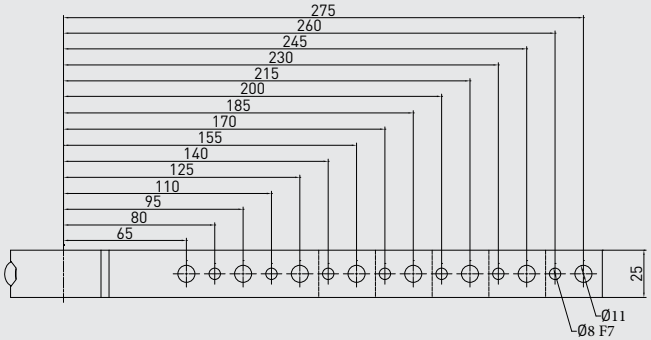

22 mm shaft – 70 mm offset

PART NO.	MATERIAL	LENGTH	WEIGHT (kg)	MAX OP. ANGLE POS. 1	MAX OP. ANGLE POS. 2	MAX OP. ANGLE POS. 3	MAX OP. ANGLE POS. 4
QNACA031M	Steel	135	1.05	135°	135°	135°	135°
QNACA032M	Steel	165	1.16	135°	135°	135°	135°
QNACA033M	Steel	195	1.27	135°	135°	135°	135°
QNACA034M	Steel	225	1.38	135°	135°	135°	135°
QNACA035M	Steel	255	1.49	135°	135°	135°	135°
QNACA036M	Steel	285	1.6	135°	135°	135°	135°

Screws: M8x18 **Tightening torque:** 25 N m / 18.43 lb·ft

22 mm shaft – 120 mm offset

PART NO.	MATERIAL	LENGTH	WEIGHT (kg)	MAX OP. ANGLE POS. 1	MAX OP. ANGLE POS. 2	MAX OP. ANGLE POS. 3	MAX OP. ANGLE POS. 4
QNACA043M	Steel	135	1.27	135°	135°	135°	135°
QNACA044M	Steel	165	1.37	135°	135°	135°	135°
QNACA045M	Steel	195	1.48	135°	135°	135°	135°
QNACA046M	Steel	225	1.58	135°	135°	135°	135°
QNACA047M	Steel	255	1.69	135°	135°	135°	135°
QNACA048M	Steel	285	1.8	135°	135°	135°	135°

Screws: M8x18 **Tightening torque:** 25 N m / 18.43 lb·ft

Subject to change without notice

FUNCTIONAL CHARTS
HE2P2E

Cycle time for max stroke	< 0.8 s NO FLOW VALVE REQUIRED

Clamping moment (at 5 bar / 72.5 psi)	390 N m / 287.64 lb·ft
Holding moment	1500 N m / 1106.34 lb·ft

The above data are meant for correct working conditions of the clamp – with the same performance level during its life time.
For applications which exceed the above data, please contact our sales representatives.

Air consumption
Air consumption for complete cycle (opening and closing) REV. 00 - 31/03/2015

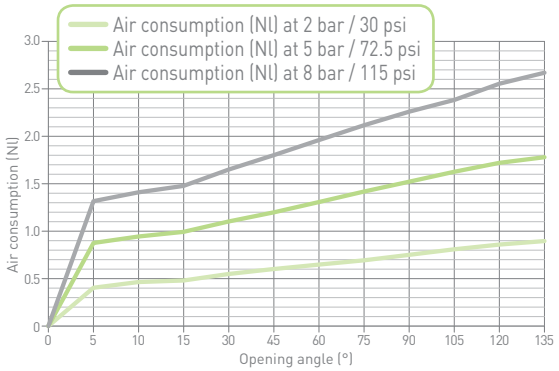

Tooling weight chart
5 bar operating pressure – 135° opening angle REV. 00 - 17/06/2015

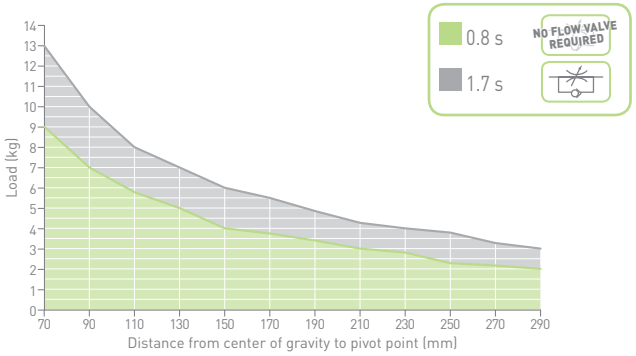

Calculation tool available upon demand

Please consult our technical representatives

Subject to change without notice

GLOBAL STANDARD COMPONENTS
NAAMS

HE2P3E

High Efficiency clamp
NAAMS std
Housing size 80/
cylinder Ø 63 mm

WEIGHT

kg
7.76

* DIMENSIONAL TOLERANCE FOR DOWEL HOLES: ±0.02
DIMENSIONAL TOLERANCE FOR THREADED HOLES: ±0.1

REV. 00 - 20/10/2015

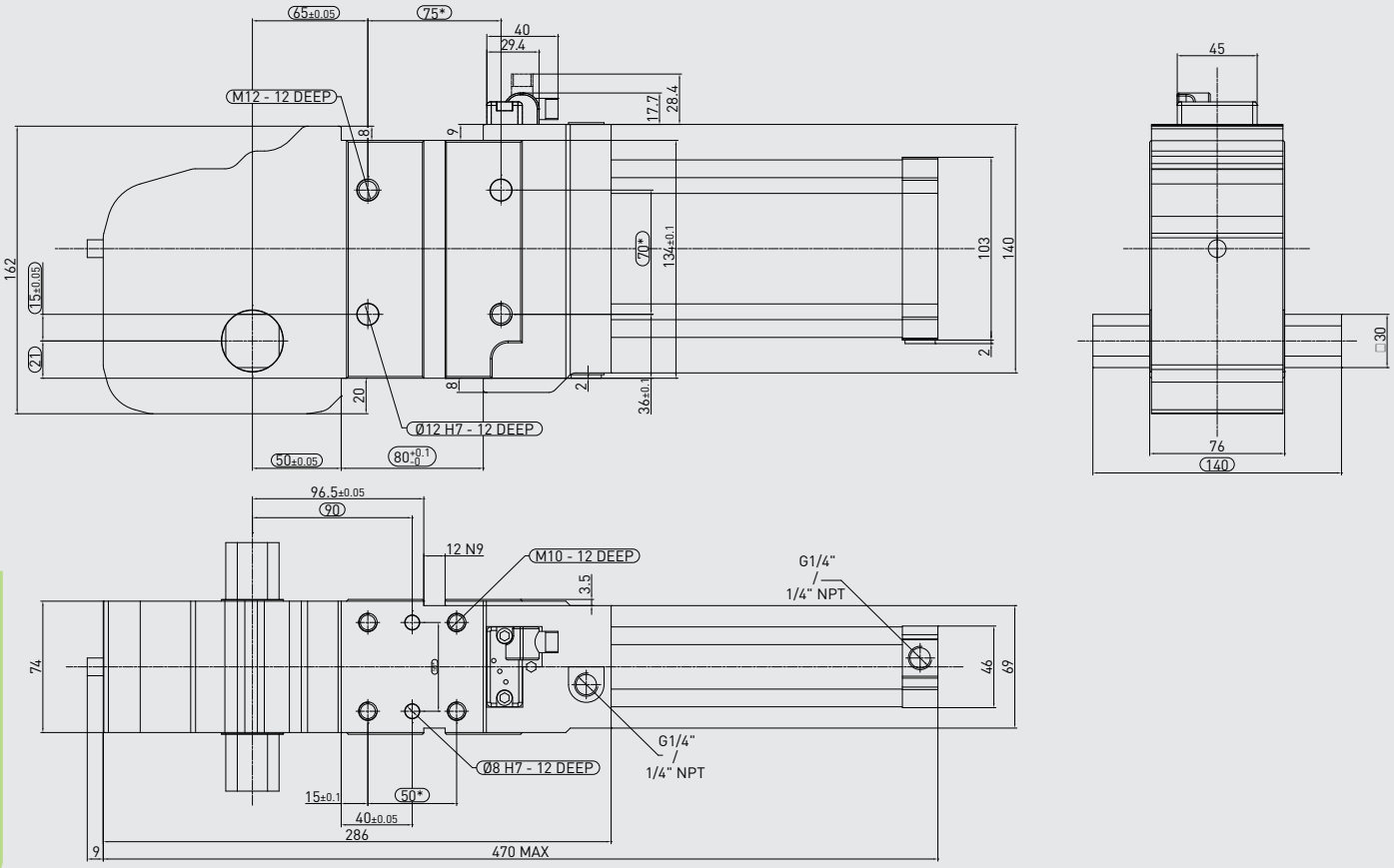

Technical features

Manual release button to open the linkage when air pressure is removed during setup. Pneumatic **ports on both sides** of the cylinder.	
Operating features	
Operating pressure	from 2 to 8 bar / from 30 to 115 psi
Lubrication	all the devices are lubricated for life at the factory. Inline air lubrication isn't required

Subject to change
without notice

REV. 00 - 31/03/2015

0 mm OFFSET

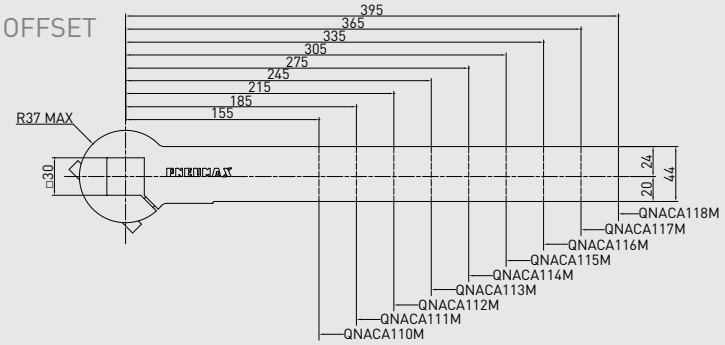

25 mm OFFSET

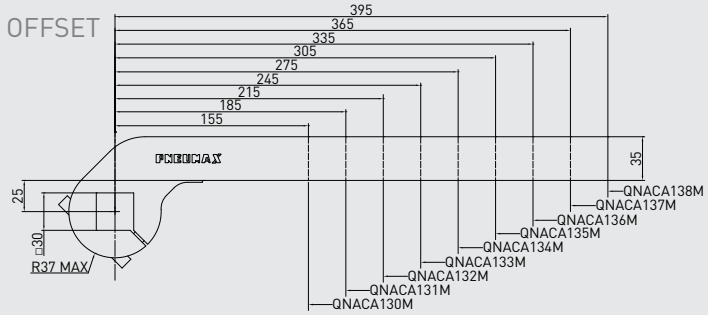

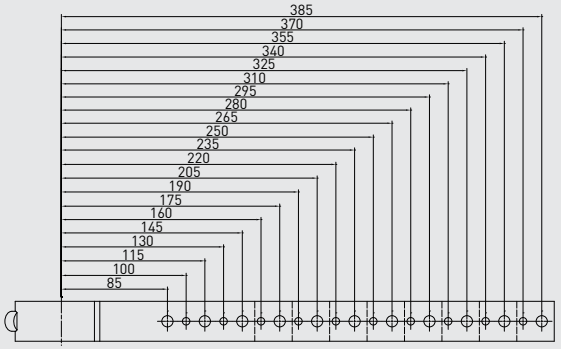

CLAMPING ARMS

30 mm shaft

Steel

30 mm shaft – 0 mm offset

PART NO.	MATERIAL	LENGTH	WEIGHT (kg)	MAX OP. ANGLE POS. 1	MAX OP. ANGLE POS. 2	MAX OP. ANGLE POS. 3	MAX OP. ANGLE POS. 4
QNACA110M	Steel	155	1.41	135°	135°	135°	135°
QNACA111M	Steel	185	1.58	135°	135°	135°	135°
QNACA112M	Steel	215	1.76	135°	135°	135°	135°
QNACA113M	Steel	245	1.93	135°	135°	135°	135°
QNACA114M	Steel	275	2.1	135°	135°	135°	135°
QNACA115M	Steel	305	2.27	135°	135°	135°	135°
QNACA116M	Steel	335	2.45	135°	135°	135°	135°
QNACA117M	Steel	365	2.62	135°	135°	135°	135°
QNACA118M	Steel	395	2.8	135°	135°	135°	135°

Screws: M10x20 **Tightening torque:** 50 N m / 36.87 lb·ft

30 mm shaft – 25 mm offset

PART NO.	MATERIAL	LENGTH	WEIGHT (kg)	MAX OP. ANGLE POS. 1	MAX OP. ANGLE POS. 2	MAX OP. ANGLE POS. 3	MAX OP. ANGLE POS. 4
QNACA130M	Steel	155	1.24	135°	135°	135°	135°
QNACA131M	Steel	185	1.39	135°	135°	135°	135°
QNACA132M	Steel	215	1.54	135°	135°	135°	135°
QNACA133M	Steel	245	1.69	135°	135°	135°	135°
QNACA134M	Steel	275	1.84	135°	135°	135°	135°
QNACA135M	Steel	305	2	135°	135°	135°	135°
QNACA136M	Steel	335	2.14	135°	135°	135°	135°
QNACA137M	Steel	365	2.29	135°	135°	135°	135°
QNACA138M	Steel	395	2.45	135°	135°	135°	135°

Screws: M10x20 **Tightening torque:** 50 N m / 36.87 lb·ft

Subject to change without notice

CLAMPING ARMS

30 mm shaft

Steel

REV. 00 - 31/03/2015

70 mm OFFSET

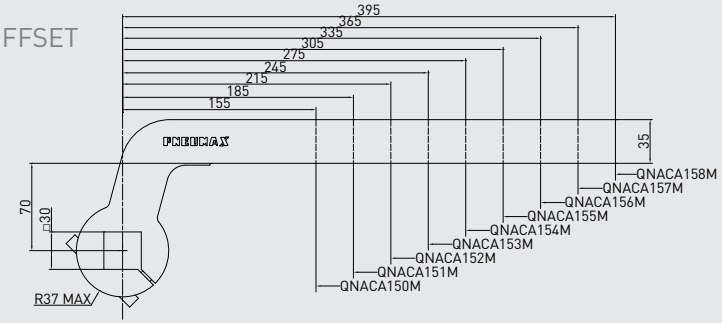

120 mm OFFSET

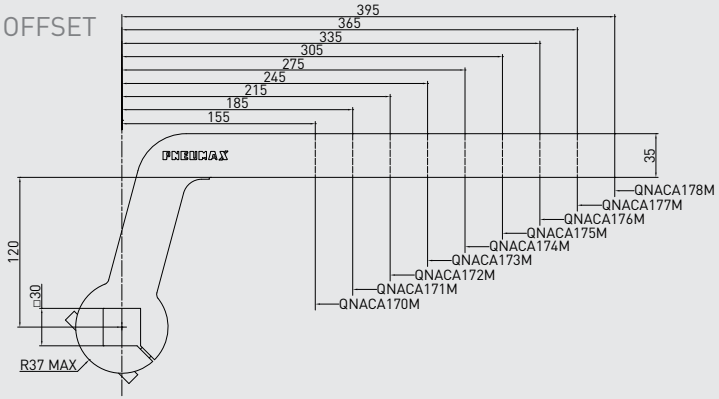

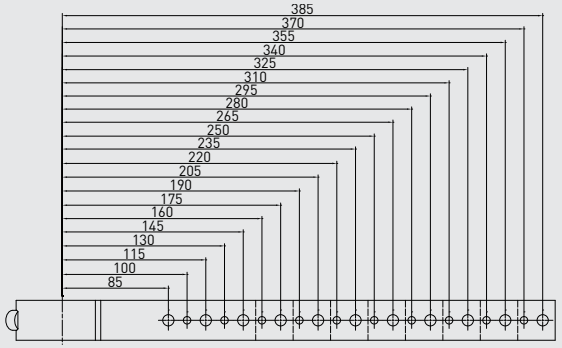

30 mm shaft – 70 mm offset

PART NO.	MATERIAL	LENGTH	WEIGHT (kg)	MAX OP. ANGLE POS. 1	MAX OP. ANGLE POS. 2	MAX OP. ANGLE POS. 3	MAX OP. ANGLE POS. 4
QNACA150M	Steel	155	1.7	135°	135°	135°	135°
QNACA151M	Steel	185	1.85	135°	135°	135°	135°
QNACA152M	Steel	215	2	135°	135°	135°	135°
QNACA153M	Steel	245	2.15	135°	135°	135°	135°
QNACA154M	Steel	275	2.3	135°	135°	135°	135°
QNACA155M	Steel	305	2.45	135°	135°	135°	135°
QNACA156M	Steel	335	2.6	135°	135°	135°	135°
QNACA157M	Steel	365	2.76	135°	135°	135°	135°
QNACA158M	Steel	395	2.92	135°	135°	135°	135°

Screws: M10x20 **Tightening torque:** 50 N m / 36.87 lb·ft

30 mm shaft – 120 mm offset

PART NO.	MATERIAL	LENGTH	WEIGHT (kg)	MAX OP. ANGLE POS. 1	MAX OP. ANGLE POS. 2	MAX OP. ANGLE POS. 3	MAX OP. ANGLE POS. 4
QNACA170M	Steel	155	1.97	135°	135°	135°	135°
QNACA171M	Steel	185	2.12	135°	135°	135°	135°
QNACA172M	Steel	215	2.27	135°	135°	135°	135°
QNACA173M	Steel	245	2.42	135°	135°	135°	135°
QNACA174M	Steel	275	2.57	135°	135°	135°	135°
QNACA175M	Steel	305	2.72	135°	135°	135°	135°
QNACA176M	Steel	335	2.87	135°	135°	135°	135°
QNACA177M	Steel	365	3.02	135°	135°	135°	135°
QNACA178M	Steel	395	3.19	135°	135°	135°	135°

Screws: M10x20 **Tightening torque:** 50 N m / 36.87 lb·ft

Subject to change without notice

FUNCTIONAL CHARTS
HE2P3E

Cycle time for max stroke	< 0.9 s NO FLOW VALVE REQUIRED

Clamping moment (at 5 bar / 72.5 psi)	850 N m / 626.92 lb·ft
Holding moment	2500 N m / 1843.90 lb·ft

The above data are meant for correct working conditions of the clamp – with the same performance level during its life time.
For applications which exceed the above data, please contact our sales representatives.

Air consumption
Air consumption for complete cycle (opening and closing) REV. 00 - 21/01/2016

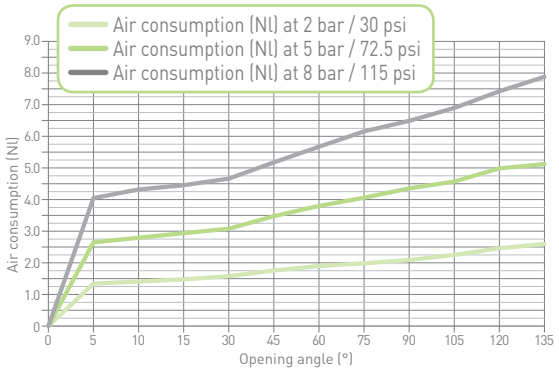

Tooling weight chart
5 bar operating pressure – 135° opening angle REV. 00 - 17/06/2015

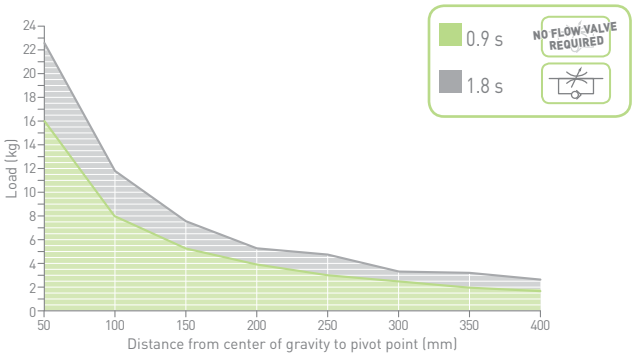

Calculation tool available upon demand

Please consult our technical representatives

Subject to change without notice

WHY PNX

FULLY SEALED CLAMPS

- Weld-contamination proven
- Suitable for laser welding applications
- Acrylic-based Loctite® for full sealing
- Easily removable sensor

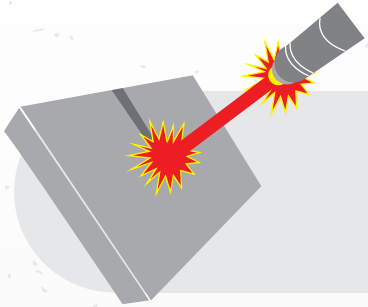

NO SILICON

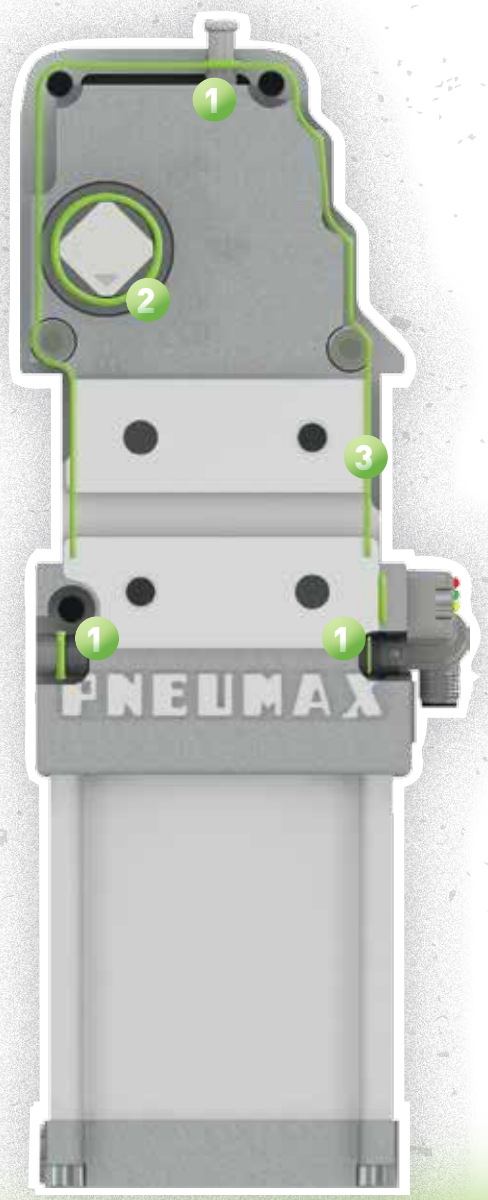

1. The manual unlock button and the adjustment access are sealed with an O-ring
2. The toggle mechanism is fully sealed
3. Acrylic-based Loctite® for full sealing

SEALED EFFECT

CS 1 P 63 E G 4 S 01

VERSION
C = clamp
CS = sealed clamp

VERSION
HE = High Efficiency clamp
HES = sealed clamp

VERSION
K = workpiece thickness compensation clamp
KS = sealed clamp

Follow the ordering string of standard clamps. For technical specifications please refer to the charts of standard clamps.

LOCATING

R-SERIES	Retractable locating pin packages
RC-SERIES	Retractable locating pin packages with CNOMO mounting pattern
HP-SERIES	High Performance retractable locating pin packages
F-SERIES	Retractable locating pin packages with dual rods

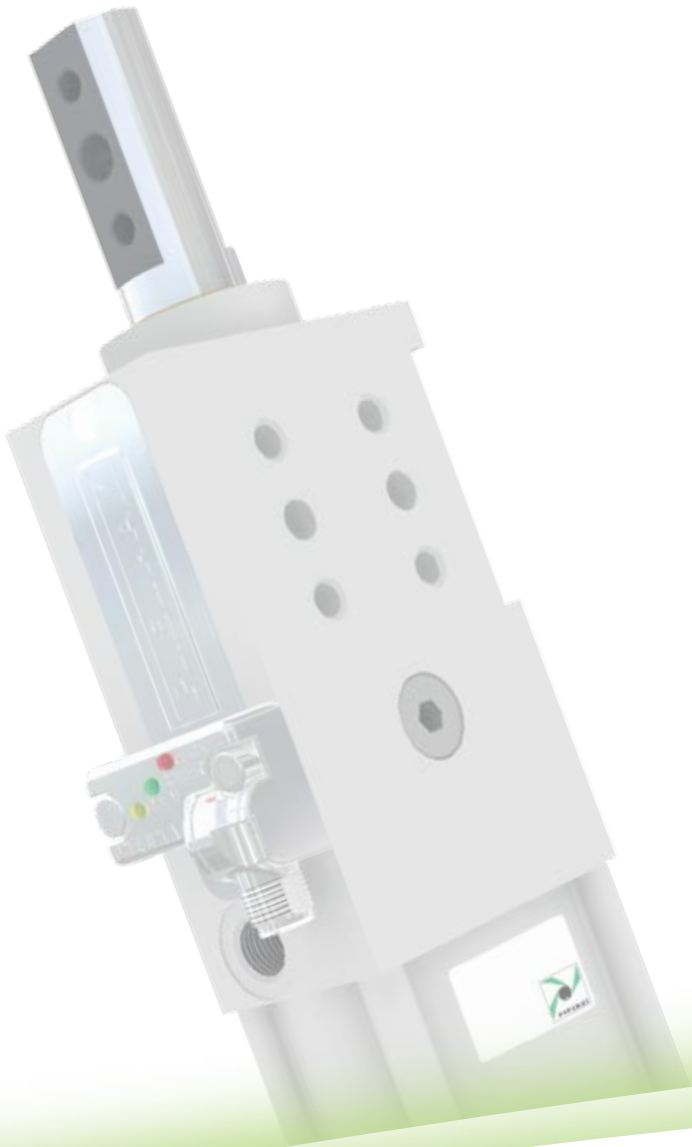

POSITIONING ACCURACY

- ✔ HIGH POSITIONING ACCURACY LEVEL: PRECISE GUIDING THROUGH DOUBLE BUSHINGS FOR AN OPTIMAL SUPPORT OF THE RODS > **TWIN PISTON ROD GUIDE**
- ✔ LOW DEFLECTION
- ✔ EFFICIENT ANTI ROTATION MECHANISM

MINIMAL OVERALL LENGTH

\+ FLAT AND NARROW DESIGN IN ALUMINUM ALLOY

= EXTRA LIGHT PRODUCTS

WHY PNX

HIGH RESISTANCE TO WELDING DEBRIS AND CORROSION

Protection against weld spatter, dirt and coolants enabling pin packages to operate continuously in extreme environments:

CHROME ROD COATING

as a protection against adhering weld sparks

+ METAL ROD SCRAPER

to prevent welding debris from entering the pin package

IP68 for the sensor

IP56 for pin package

long life built-in protected components in **rust prevention**

Clean design with **user-friendly surfaces** and no dirt or welding deposit traps

Ø_32 MM PIN PACKAGE

Anti-rotation device
to reduce any rotation free-play

Guiding surface

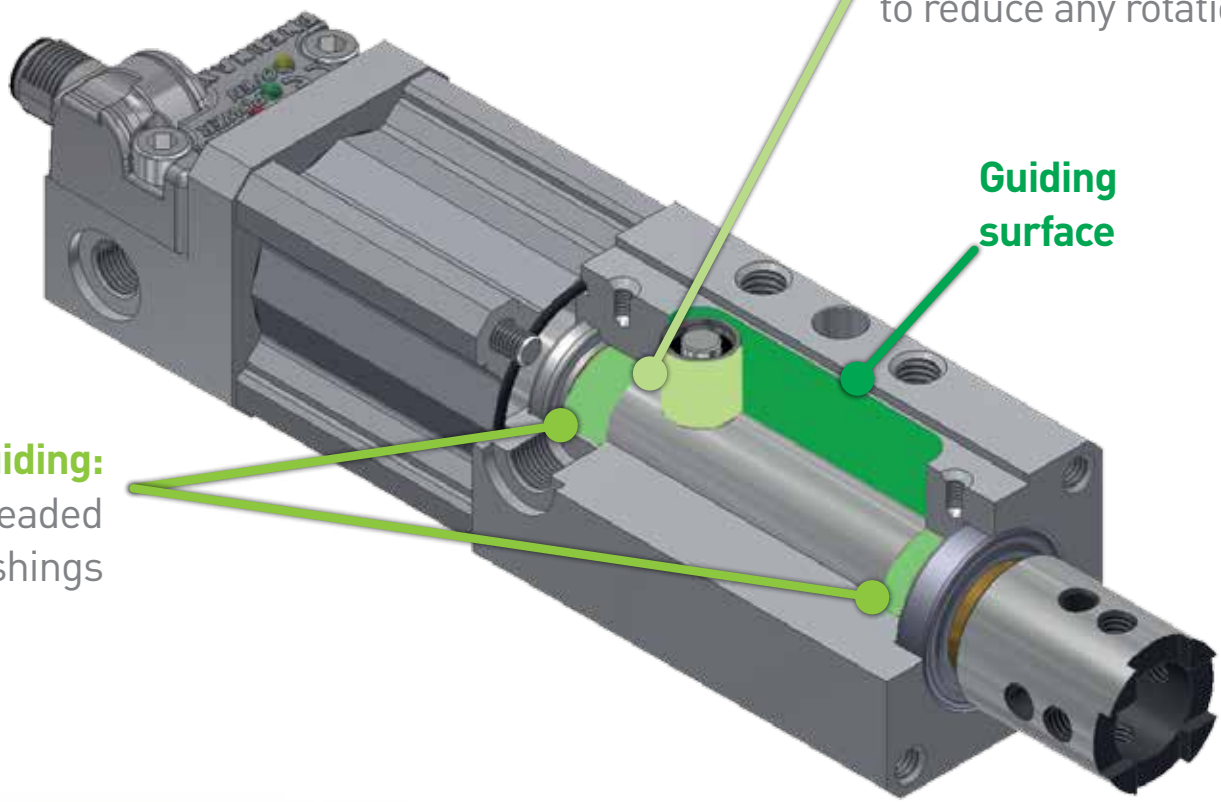

Twin linear rod guiding:
2 far apart spreaded bushings

High positioning accuracy level

Ø_32 MM PIN PACKAGE

Long life built-in components in rust prevention

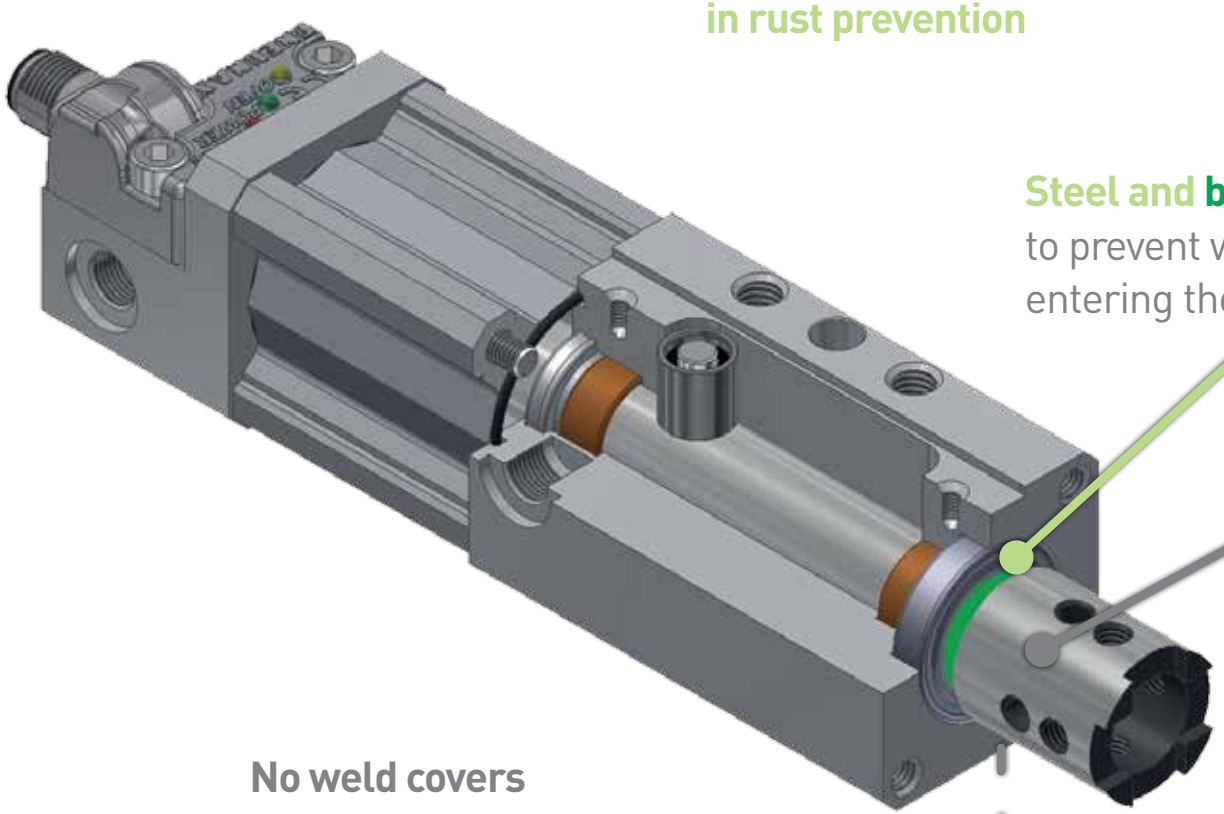

Steel and brass rod scraper
to prevent welding debris from entering the pin package

Chrome rod coating
as a protection against adhering weld sparks

No weld covers or bellows required

Ø_32 MM PIN PACKAGE

Same sensor used on clamps pin packages, power pivots & gripper clamps.

2-sided mounting option

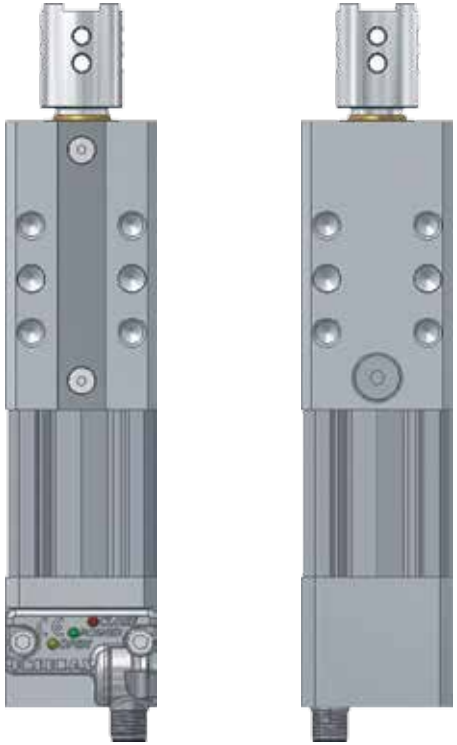

Front mount Rear mount

Supply ports on 3 sides

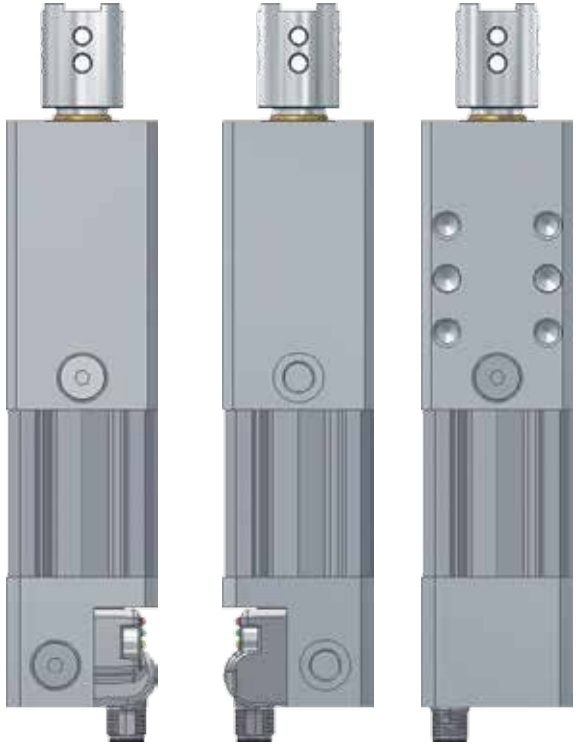

G ports on 3 sides

ORDERING STRING
R_32-SERIES

R	P	32	E	20	G	3	1

VERSION
R = retractable locating pin package

OPERATION - SERIES
P = pneumatic - flat version
A = pneumatic - compact version

SIZE
32 = Ø 32 mm

SENSOR
E = electronic sensor with M12 swivel connector - PNP
A = electronic sensor with M12 swivel connector - NPN
N = no sensor
B = electronic sensor with M8 swivel connector - PNP

STROKE
20 = 20 mm
40 = 40 mm

PORTS
G = GAS

ROD TERMINATION
1 = iØ 16 mm cross-cut key rod termination
2 = iØ 10 mm cross-cut key rod termination
3 = rod termination for offset pins
4 = rod termination with key

ROD ORIENTATION (FOR TERMINATION TYPE 3)
1 =
2 =
3 =
4 =

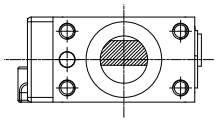

RP32

RA32

ROD TERMINATION

Rod 1

Rod 2

Rod 3

Rod 4

Subject to change without notice

* DIMENSIONAL TOLERANCE FOR DOWEL HOLES: ±0.02
DIMENSIONAL TOLERANCE FOR THREADED HOLES: ±0.1

REV. 00 - 07/03/2017

WEIGHT

kg 0.88

min. stroke version

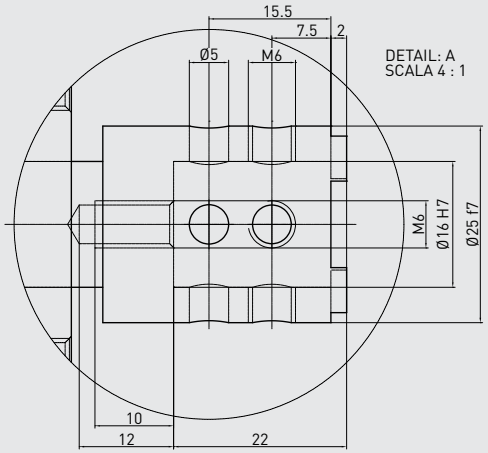

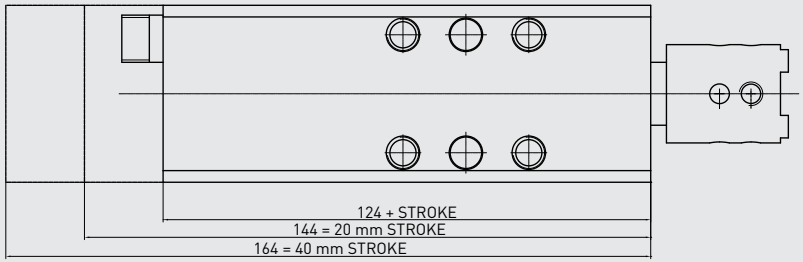

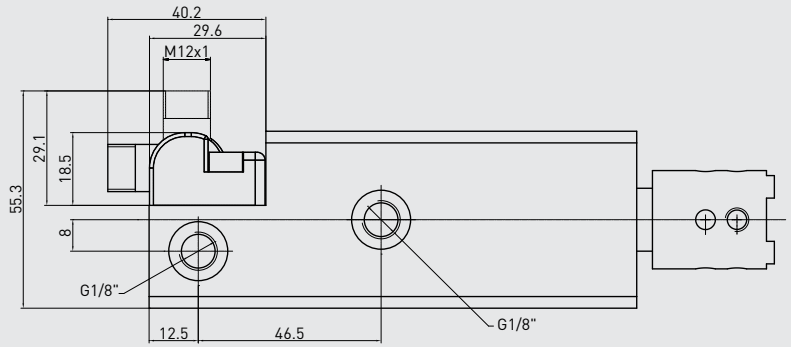

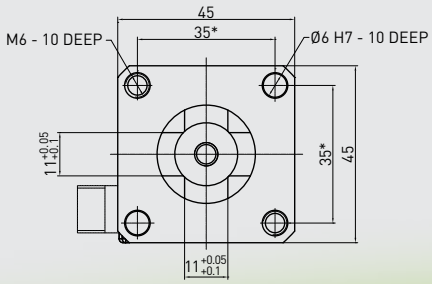

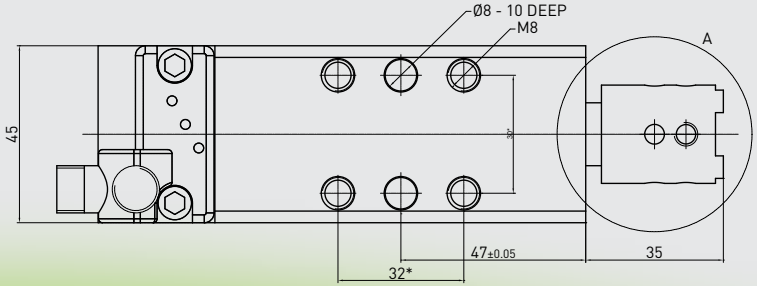

RP32E _1

Retractable locating pin package

Size 32 mm

iØ 16 mm cross-cut key rod termination

Technical features

Operating features	
Operating pressure	from 2 to 8 bar / from 30 to 115 psi
Lubrication	all the devices are lubricated for life at the factory. Inline air lubrication isn't required

RP32E _2

Retractable locating pin package

Size 32 mm

iØ 10 mm cross-cut key rod termination

WEIGHT

kg 0.88

min. stroke version

* DIMENSIONAL TOLERANCE FOR DOWEL HOLES: ±0.02
DIMENSIONAL TOLERANCE FOR THREADED HOLES: ±0.1

REV. 00 - 00/00/0000

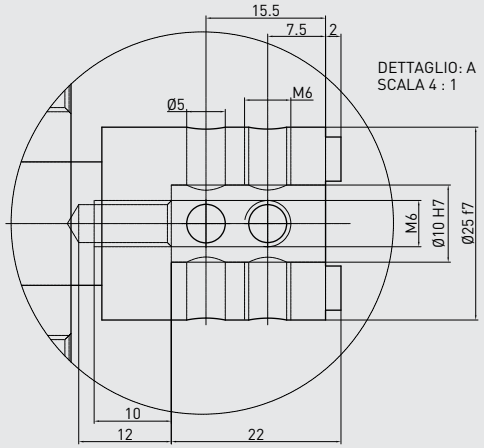

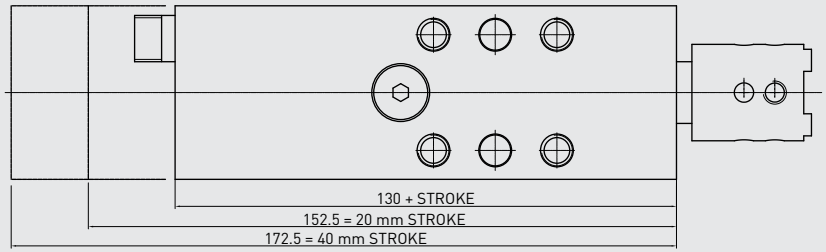

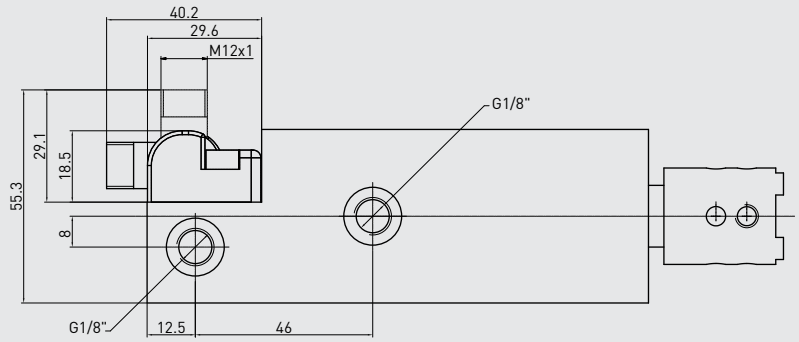

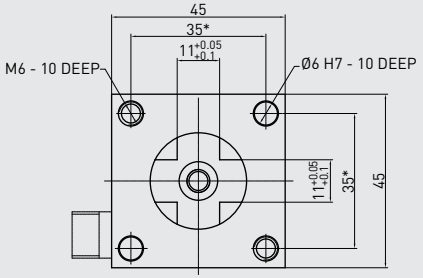

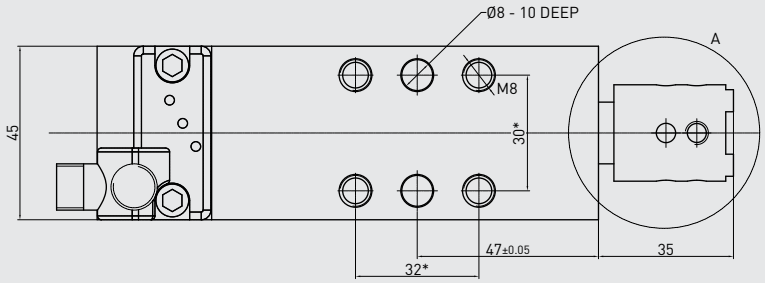

Technical features

Operating features	
Operating pressure	from 2 to 8 bar / from 30 to 115 psi
Lubrication	all the devices are lubricated for life at the factory. Inline air lubrication isn't required

Subject to change without notice

* DIMENSIONAL TOLERANCE FOR DOWEL HOLES: ±0.02
DIMENSIONAL TOLERANCE FOR THREADED HOLES: ±0.1

REV. 02 - 12/01/2018

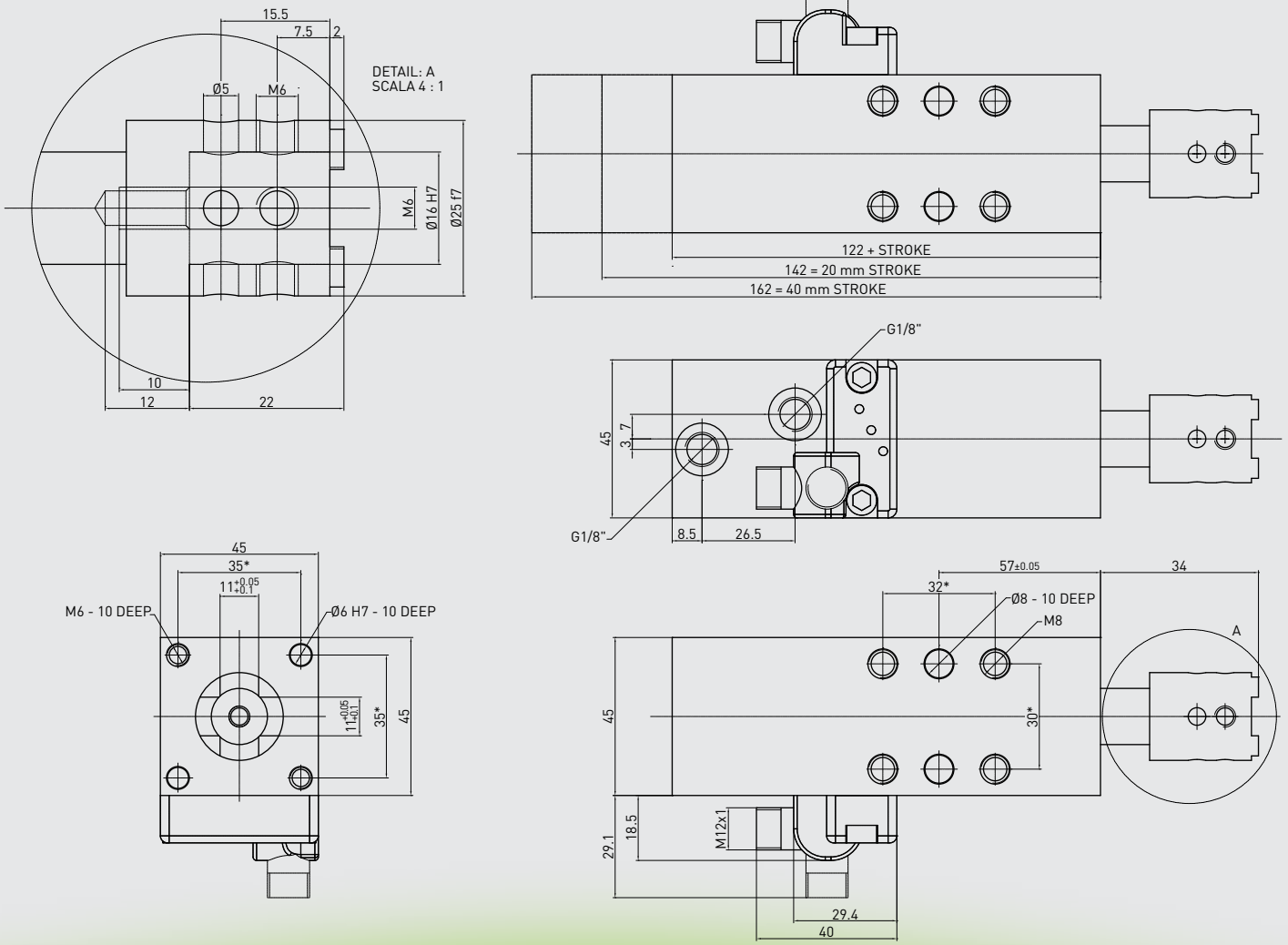

WEIGHT

kg 0.94

min. stroke version

RA32E _1

Retractable locating pin package

Size 32 mm

iØ 16 mm cross-cut key rod termination

Technical features

Operating features	
Operating pressure	from 2 to 8 bar / from 30 to 115 psi
Lubrication	all the devices are lubricated for life at the factory. Inline air lubrication isn't required

RA32E _2

Retractable locating pin package

Size 32 mm

iØ 10 mm cross-cut key rod termination

WEIGHT

kg 0.94

min. stroke version

* DIMENSIONAL TOLERANCE FOR DOWEL HOLES: ±0.02
DIMENSIONAL TOLERANCE FOR THREADED HOLES: ±0.1

REV. 02 - 12/01/2018

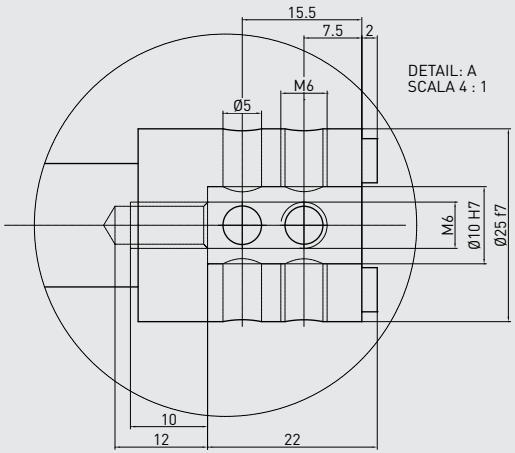

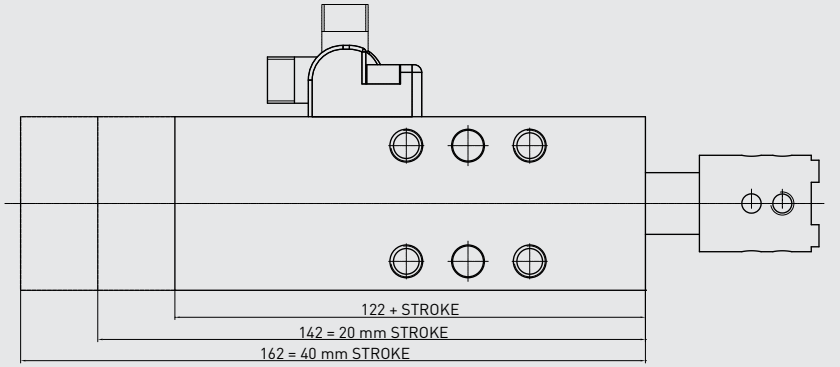

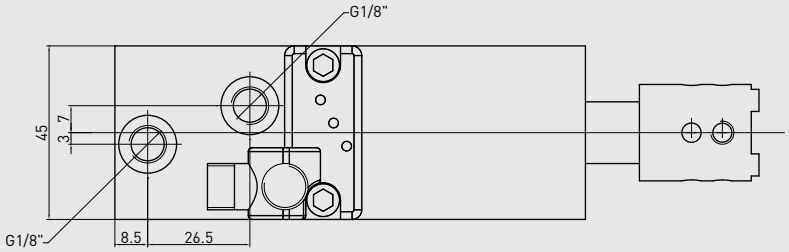

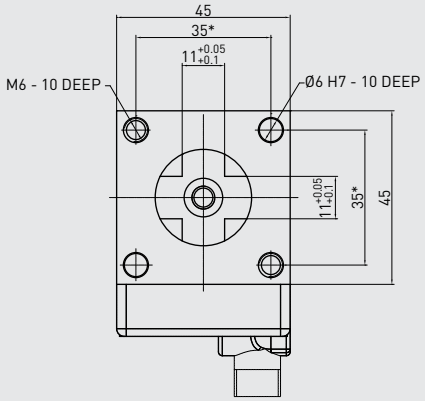

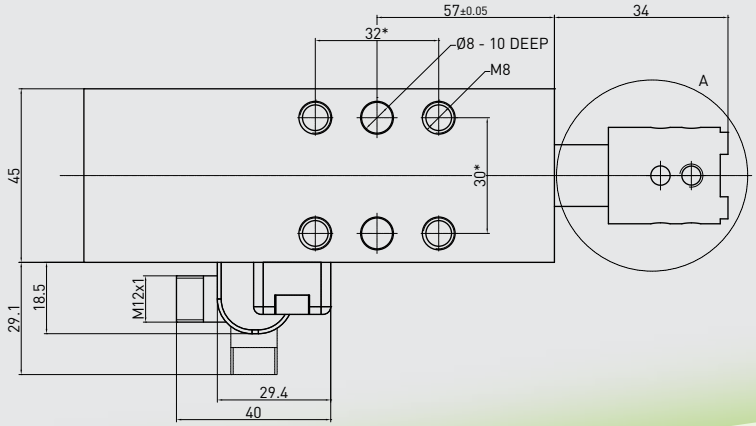

Technical features

Operating features	
Operating pressure	from 2 to 8 bar / from 30 to 115 psi
Lubrication	all the devices are lubricated for life at the factory. Inline air lubrication isn't required

Subject to change without notice

ORDERING STRING
R-SERIES

R	P	50	E	40	D	3	1

VERSION
R = retractable locating pin package

OPERATION
P = pneumatic
D = pneumatic with manual operation

1 =

SIZE
50 = Ø 50 mm
63 = Ø 63 mm

SENSOR
E = electronic sensor with M12 swivel connector - PNP
A = electronic sensor with M12 swivel connector - NPN
N = no sensor
B = electronic sensor with M8 swivel connector - PNP

STROKE
15 = 15 mm
25 = 25 mm
40 = 40 mm
50 = 50 mm
60 = 60 mm

PORTS
G = GAS
D = dual GAS ports on rear end cap

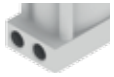

ROD TERMINATION
1 = iØ 16 mm cross-cut key rod termination
2 = iØ 10 mm cross-cut key rod termination
3 = rod termination for offset pins
4 = rod termination with key
5 = rod with flat termination dia. 10 mm
6 = rod with flat termination dia. 12 mm
7 = iØ 12 mm CNOMO termination
8 = iØ 20 mm CNOMO termination

ROD ORIENTATION (FOR TERMINATION TYPE 3)
1 =
2 =
3 =
4 =

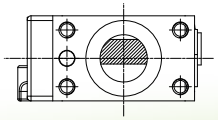

ROD TERMINATION

Rod 1

Rod 2

Rod 3

Rod 4

Rod 5

Rod 6

Rod 7

Rod 8

RP50E_1

Retractable locating pin package

Size 50 mm

iØ 16 mm cross-cut key rod termination

WEIGHT

kg 1.85 min. stroke version

kg 2.1 max. stroke version

* DIMENSIONAL TOLERANCE FOR DOWEL HOLES: ±0.02
DIMENSIONAL TOLERANCE FOR THREADED HOLES: ±0.1

REV. 01 - 26/02/2016

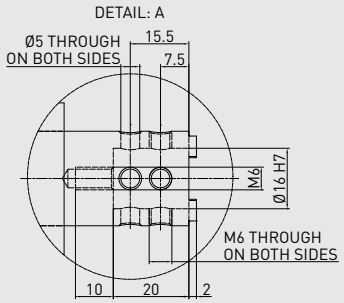

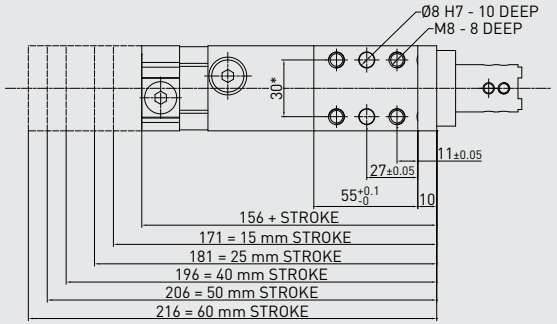

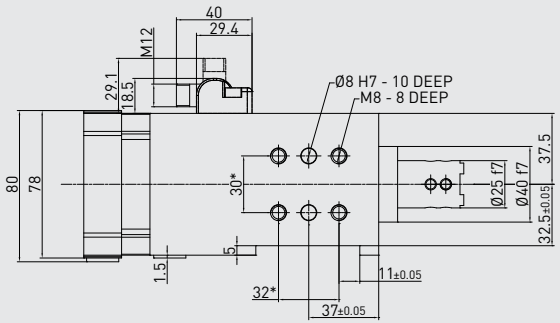

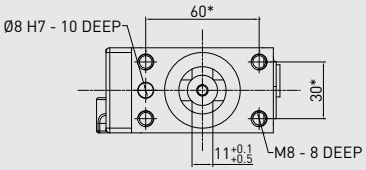

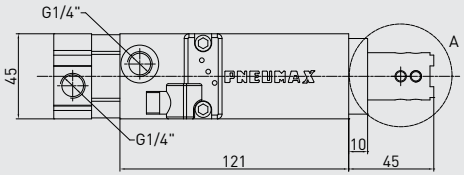

Technical features

Operating features	
Operating pressure	from 2 to 8 bar / from 30 to 115 psi
Lubrication	all the devices are lubricated for life at the factory. Inline air lubrication isn't required

Subject to change without notice

* DIMENSIONAL TOLERANCE FOR DOWEL HOLES: ±0.02
DIMENSIONAL TOLERANCE FOR THREADED HOLES: ±0.1

REV. 01 - 26/02/2016

WEIGHT

kg 1.85 min. stroke version

kg 2.1 max. stroke version

RP50E_2

Retractable locating pin package

Size 50 mm

iØ 10 mm cross-cut key rod termination

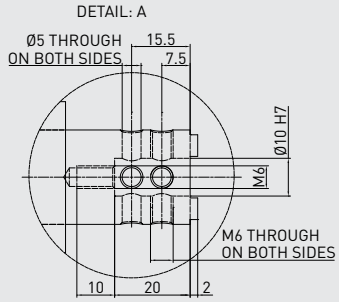

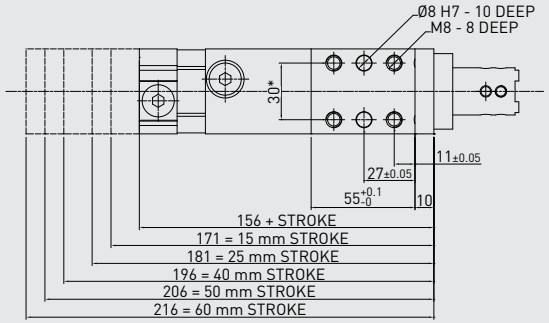

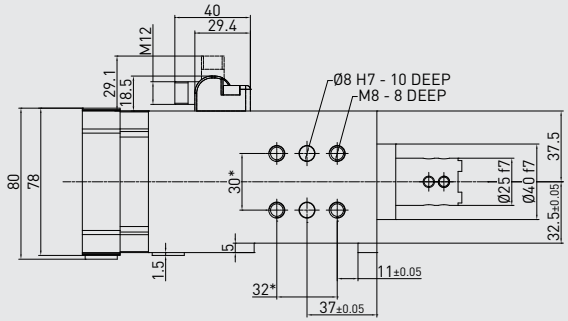

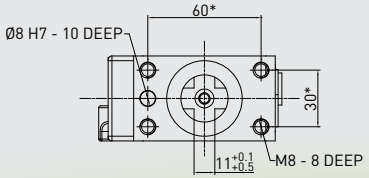

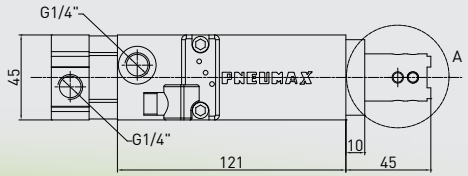

Technical features

Operating features	
Operating pressure	from 2 to 8 bar / from 30 to 115 psi
Lubrication	all the devices are lubricated for life at the factory. Inline air lubrication isn't required

RP50E_3

Retractable locating pin package

Size 50 mm

Rod termination for offset pins

WEIGHT

kg 1.85 min. stroke version

kg 2.1 max. stroke version

* DIMENSIONAL TOLERANCE FOR DOWEL HOLES: ±0.02
DIMENSIONAL TOLERANCE FOR THREADED HOLES: ±0.1

REV. 00 - 31/03/2015

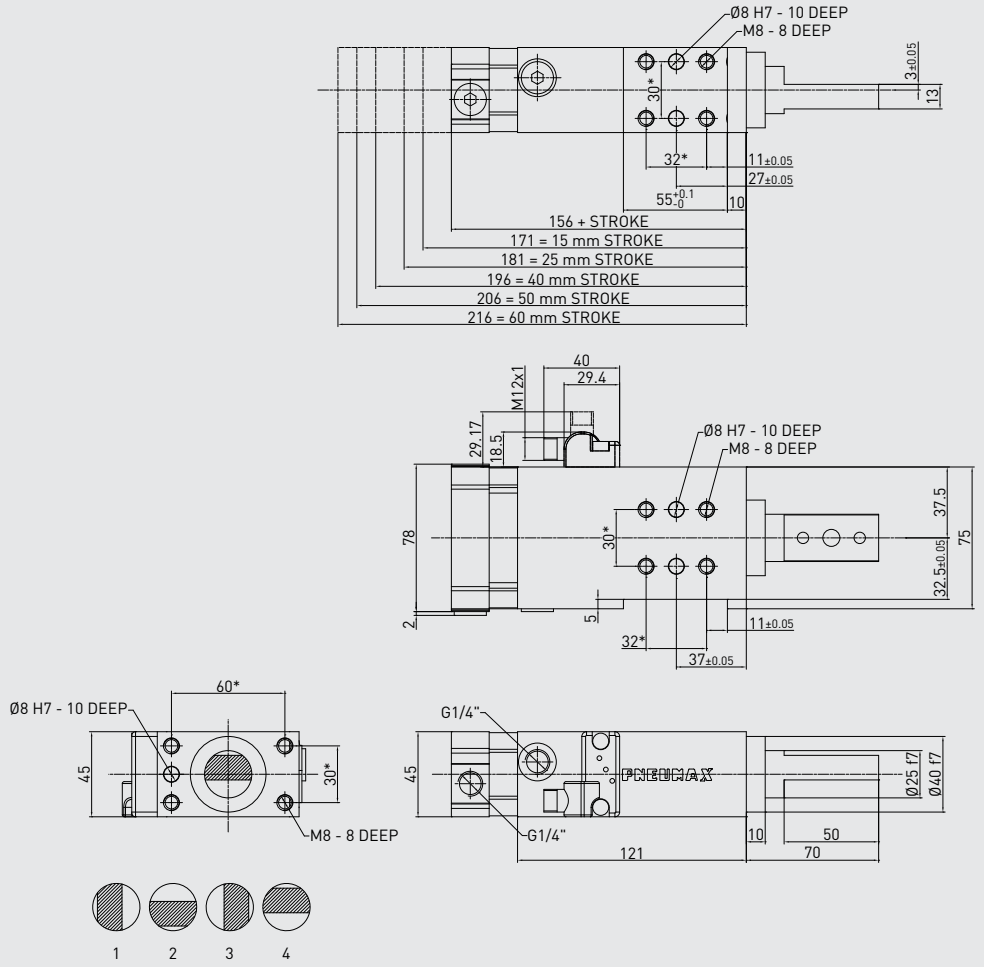

Technical features

Operating features	
Operating pressure	from 2 to 8 bar / from 30 to 115 psi
Lubrication	all the devices are lubricated for life at the factory. Inline air lubrication isn't required

Subject to change without notice

* DIMENSIONAL TOLERANCE FOR DOWEL HOLES: ±0.02
DIMENSIONAL TOLERANCE FOR THREADED HOLES: ±0.1

REV. 00 - 31/03/2015

WEIGHT

kg 1.85 min. stroke version

kg 2.1 max. stroke version

RP50E_4

Retractable locating pin package

Size 50 mm

Rod termination with key

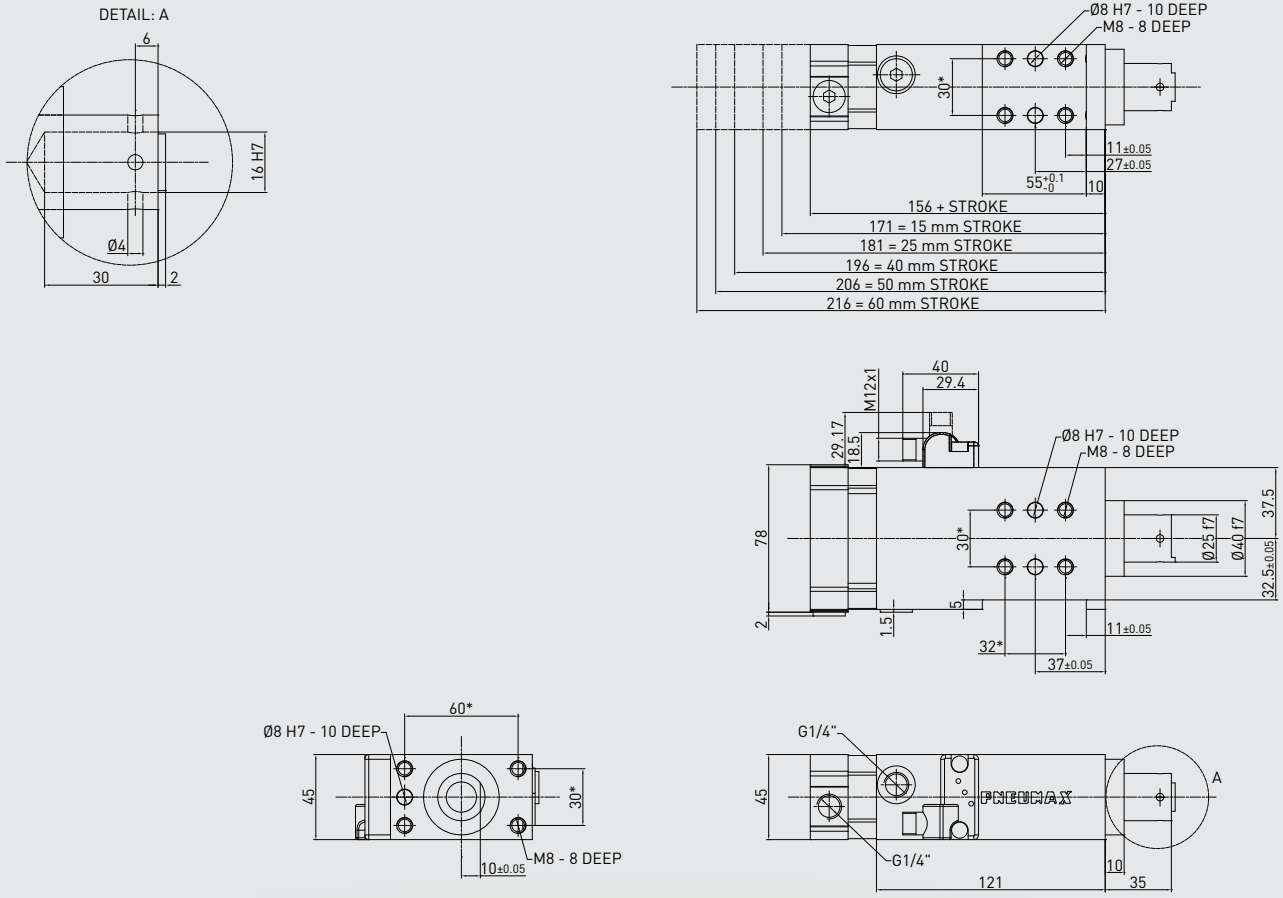

Technical features

Operating features	
Operating pressure	from 2 to 8 bar / from 30 to 115 psi
Lubrication	all the devices are lubricated for life at the factory. Inline air lubrication isn't required

RP50E_5

Retractable locating pin package

Size 50 mm

iØ 10 mm flat termination

WEIGHT

kg 1.85 min. stroke version

kg 2.1 max. stroke version

* DIMENSIONAL TOLERANCE FOR DOWEL HOLES: ±0.02
DIMENSIONAL TOLERANCE FOR THREADED HOLES: ±0.1

REV. 00 - 14/03/2016

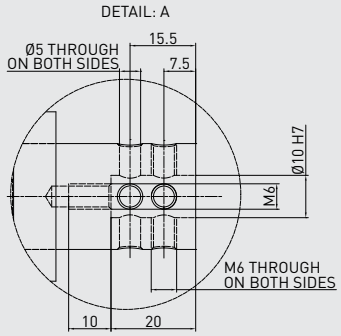

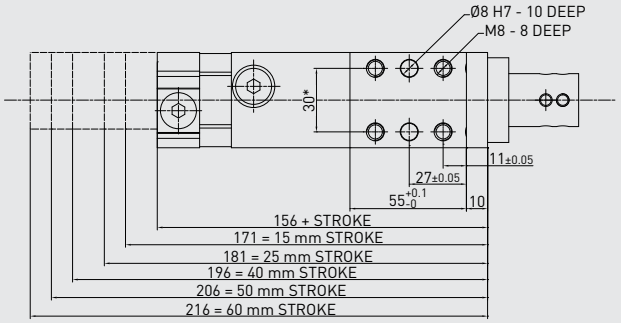

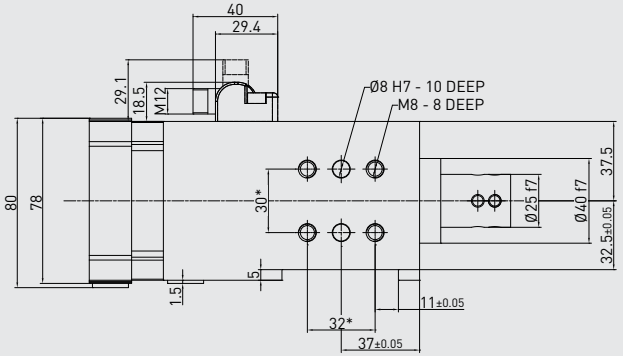

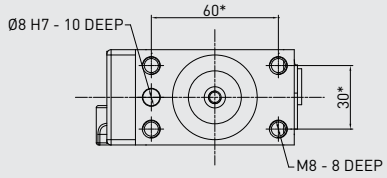

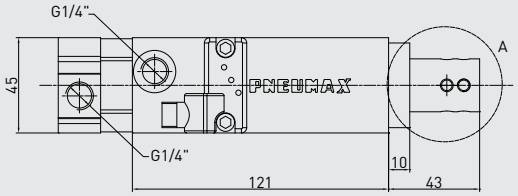

Technical features

Operating features	
Operating pressure	from 2 to 8 bar / from 30 to 115 psi
Lubrication	all the devices are lubricated for life at the factory. Inline air lubrication isn't required

Subject to change without notice

* DIMENSIONAL TOLERANCE FOR DOWEL HOLES: ±0.02
DIMENSIONAL TOLERANCE FOR THREADED HOLES: ±0.1

REV. 00 - 14/03/2016

DETAIL: A

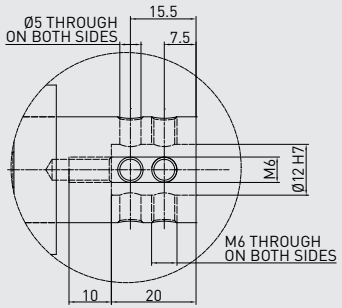

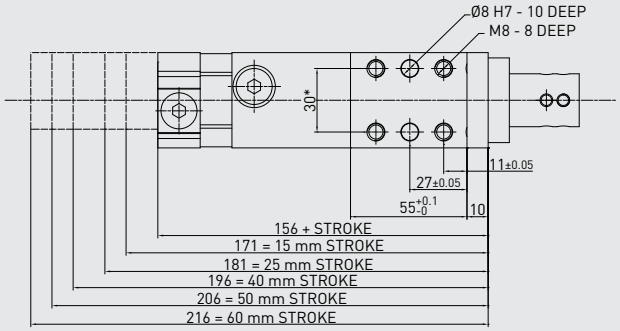

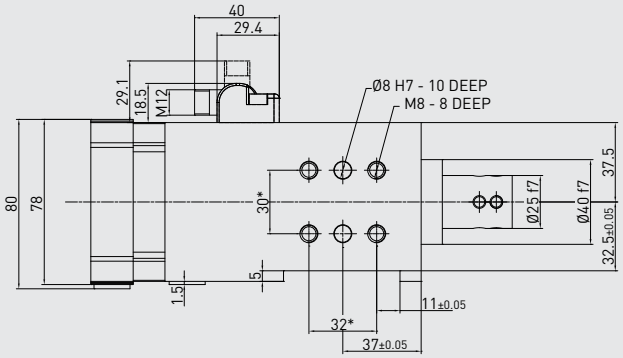

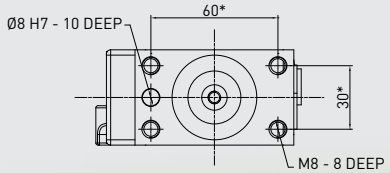

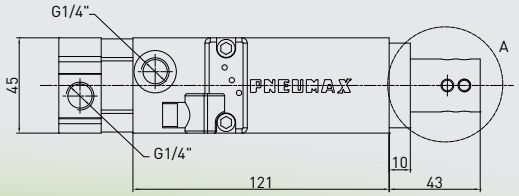

WEIGHT

kg 1.85 — min. stroke version

kg 2.1 — max. stroke version

RP50E_6

Retractable locating pin package

Size 50 mm

iØ 12 mm flat termination

Technical features

Operating features	
Operating pressure	from 2 to 8 bar / from 30 to 115 psi
Lubrication	all the devices are lubricated for life at the factory. Inline air lubrication isn't required

RD150E_1

Retractable locating pin package

Size 50 mm

iØ 16 mm cross-cut key rod termination

With manual operation

* DIMENSIONAL TOLERANCE FOR DOWEL HOLES: ±0.02
DIMENSIONAL TOLERANCE FOR THREADED HOLES: ±0.1

REV. 04 - 05/03/2018

WEIGHT
D1 handle included

kg 2.85 min. stroke version

kg 3.1 max. stroke version

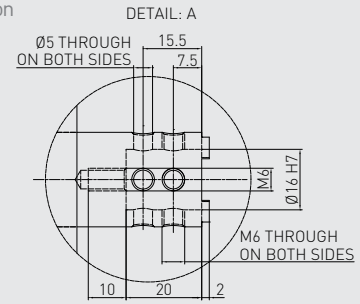

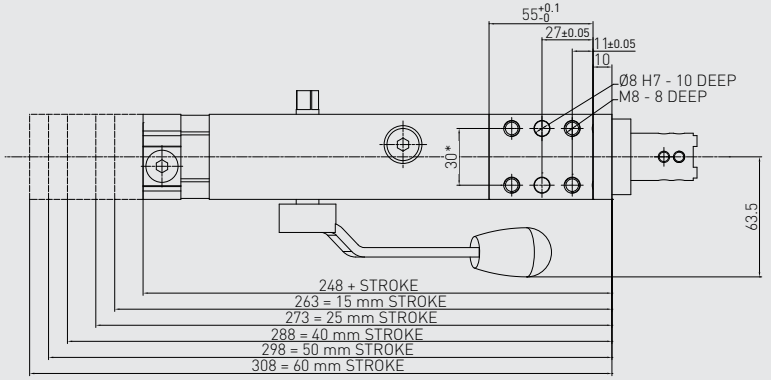

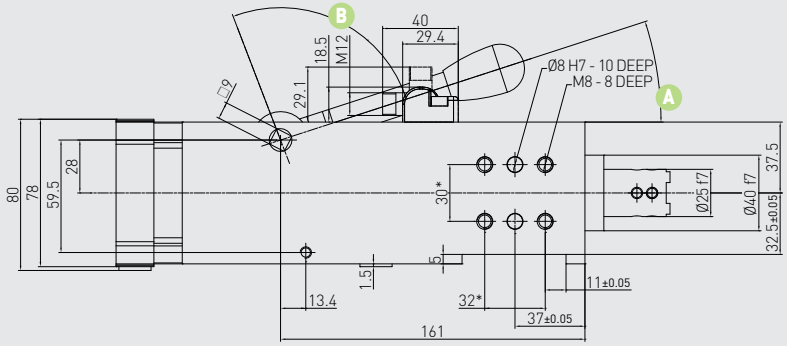

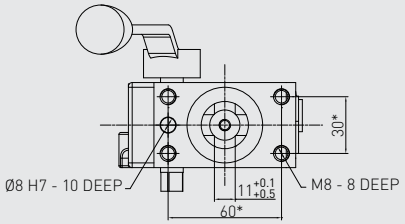

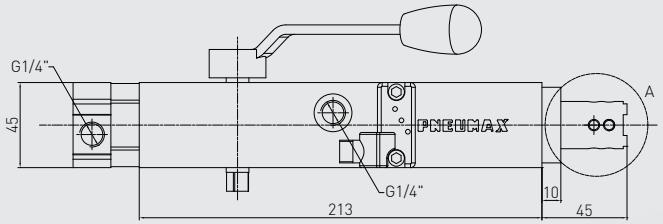

Handle swivel angle

Stroke	Handle swivel angle A	Handle swivel angle B
15	90°	18°
25	70°	38°
40	42°	76°
50	25°	83°
60	15°	93°

Subject to change without notice

* DIMENSIONAL TOLERANCE FOR DOWEL HOLES: ±0.02
DIMENSIONAL TOLERANCE FOR THREADED HOLES: ±0.1

REV. 04 - 05/03/2018

WEIGHT
D1 handle included

kg 2.85	kg 3.1
min. stroke version	max. stroke version

RD150E_2

Retractable locating pin package

Size 50 mm

iØ 10 mm cross-cut key rod termination

With manual operation

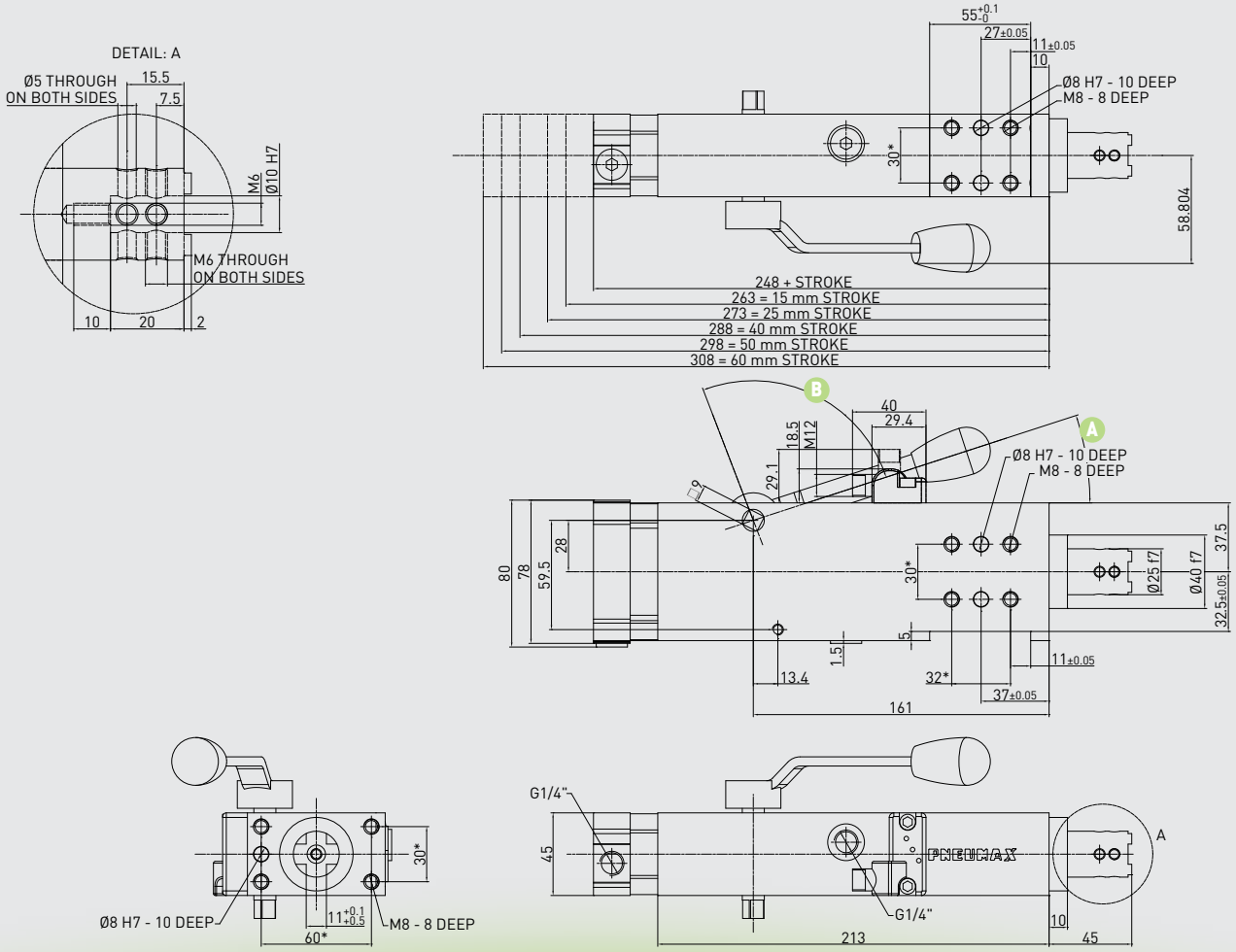

Handle swivel angle

Stroke	Handle swivel angle A	Handle swivel angle B
15	90°	18°
25	70°	38°
40	42°	76°
50	25°	83°
60	15°	93°

RD150E_3

Retractable locating pin package

Size 50 mm

Rod termination for offset pins

With manual operation

WEIGHT
D1 handle included

kg 2.85	kg 3.1
min. stroke version	max. stroke version

* DIMENSIONAL TOLERANCE FOR DOWEL HOLES: ±0.02
DIMENSIONAL TOLERANCE FOR THREADED HOLES: ±0.1

REV. 04 - 05/03/2018

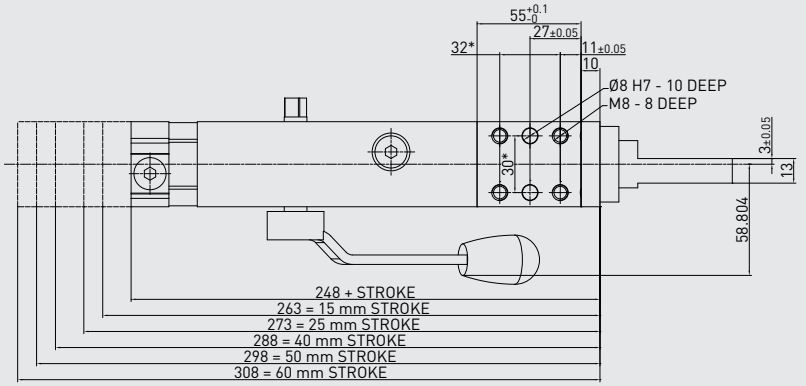

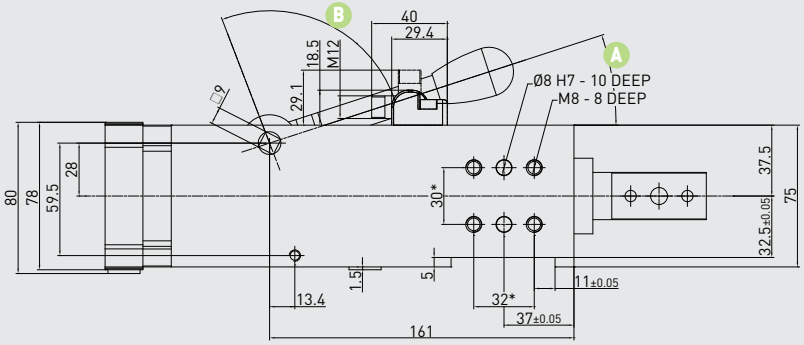

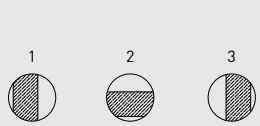

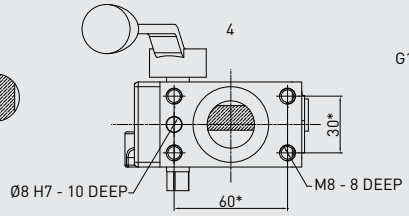

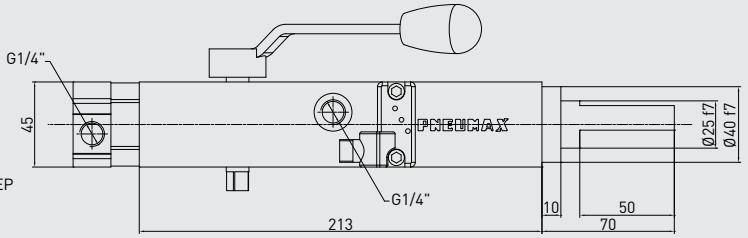

Handle swivel angle

Stroke	Handle swivel angle A	Handle swivel angle B
15	90°	18°
25	70°	38°
40	42°	76°
50	25°	83°
60	15°	93°

Subject to change without notice

* DIMENSIONAL TOLERANCE FOR DOWEL HOLES: ±0.02
DIMENSIONAL TOLERANCE FOR THREADED HOLES: ±0.1

REV. 04 - 05/03/2018

WEIGHT
D1 handle included

kg 2.85	kg 3.1
min. stroke version	max. stroke version

RD150E_4

Retractable locating pin package

Size 50 mm

Rod termination with key

With manual operation

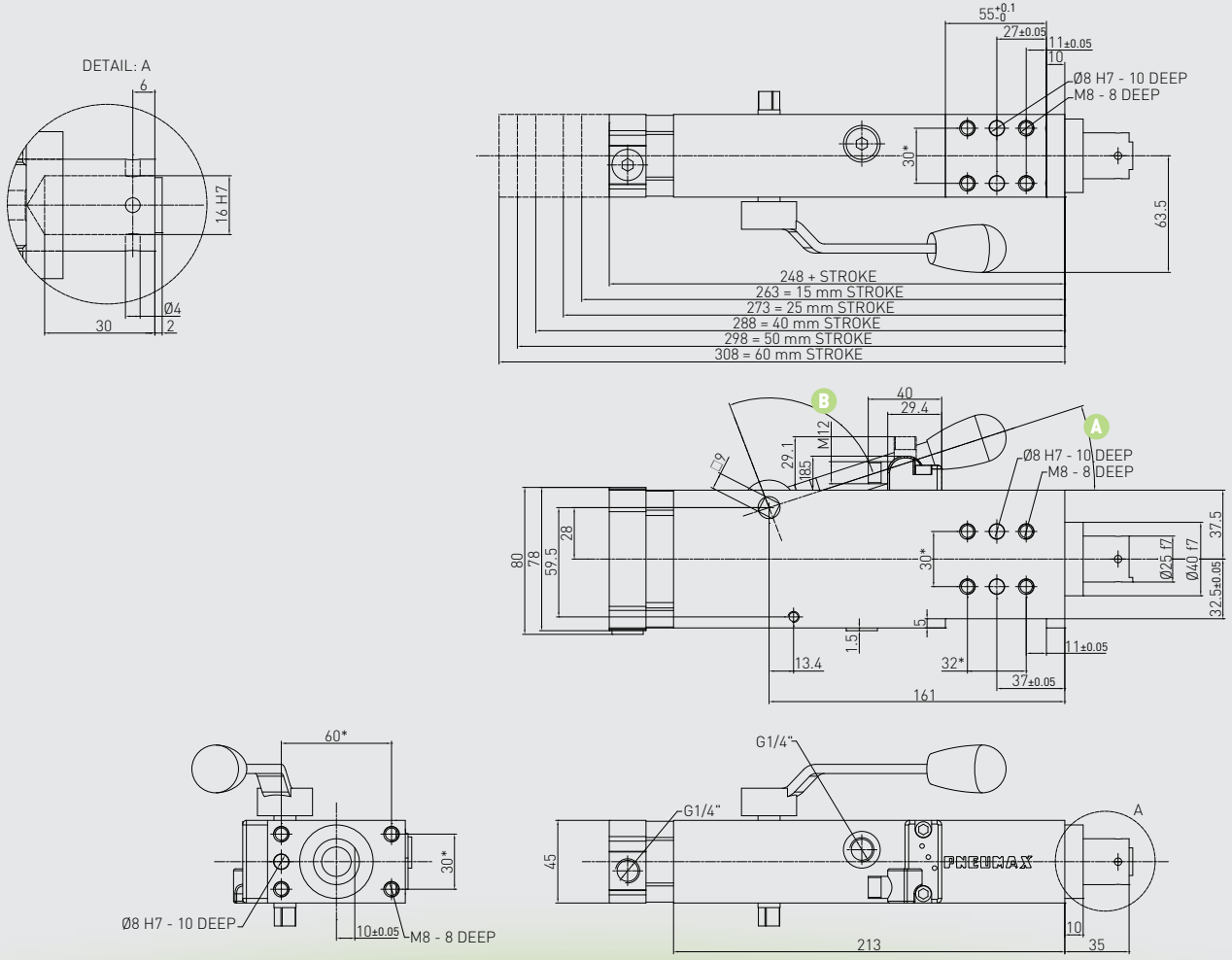

Handle swivel angle

Stroke	Handle swivel angle A	Handle swivel angle B
15	90°	18°
25	70°	38°
40	42°	76°
50	25°	83°
60	15°	93°

FUNCTIONAL CHARTS
SIZE 50 mm

Load position A

horizontal mounting position of the retractable locating pin/load centre on the rod

Load position B

horizontal mounting position of the retractable locating pin/load centre at 100 mm from the rod axis

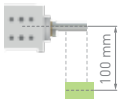

Load position C

vertical mounting position of the retractable locating pin/load centre at 100 mm from the rod axis

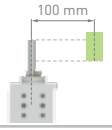

Please get in touch with our technical representatives for any application which exceeds the above values, to find the appropriate solution for your application.

Subject to change without notice

Max deflection

Stroke	Load (kg)	Load position A deviation (mm)	Load position B deviation (mm)	Load position C deviation (mm)
60 mm	0.5	0.007	0.012	0.01
	1	0.013	0.025	0.023
	1.5	0.02	0.04	0.036
	2	0.03	0.053	0.049
	2.5	0.038	0.067	0.064
	3	0.045	0.082	0.075
50 mm	0.5	0.006	0.009	0.007
	1	0.013	0.02	0.018
	1.5	0.021	0.032	0.028
	2	0.026	0.047	0.043
	2.5	0.032	0.66	0.057
	3	0.037	0.075	0.068
40 mm	0.5	0.004	0.009	0.004
	1	0.009	0.02	0.009
	1.5	0.013	0.032	0.013
	2	0.018	0.047	0.018
	2.5	0.022	0.66	0.022
	3	0.026	0.075	0.026
25 mm	0.5	0	0.005	0
	1	0.005	0.015	0.005
	1.5	0.007	0.032	0.007
	2	0.011	0.047	0.011
	2.5	0.012	0.66	0.012
	3	0.014	0.075	0.014
15 mm	0.5	0	0.005	0
	1	0.002	0.018	0
	1.5	0.004	0.025	0.002
	2	0.007	0.033	0.006
	2.5	0.012	0.043	0.009
	3	0.014	0.052	0.013

Functional data (at 5 bar / 72.5 psi)

Thrust force	825 N
Pull force	980 N
Max bending moment	3 N m / 2.21 lb·ft
Max distance from the load centre to the rod	200 mm

Cycle time for max stroke

< 0.8 s NO FLOW VALVE REQUIRED

Air consumption

Air consumption for complete cycle

REV. 00 - 18/06/2015

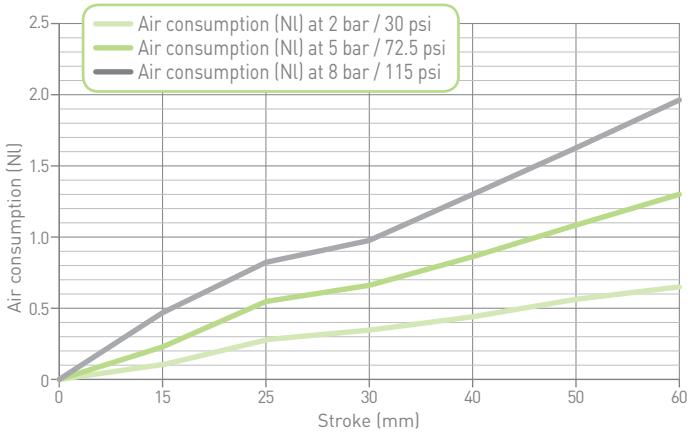

* DIMENSIONAL TOLERANCE FOR DOWEL HOLES: ±0.02
DIMENSIONAL TOLERANCE FOR THREADED HOLES: ±0.1

REV. 01 - 29/02/2016

WEIGHT

kg 2.45 min. stroke version

kg 2.75 max. stroke version

RP63E_1

Retractable locating pin package

Size 63 mm

iØ 16 mm cross-cut key rod termination

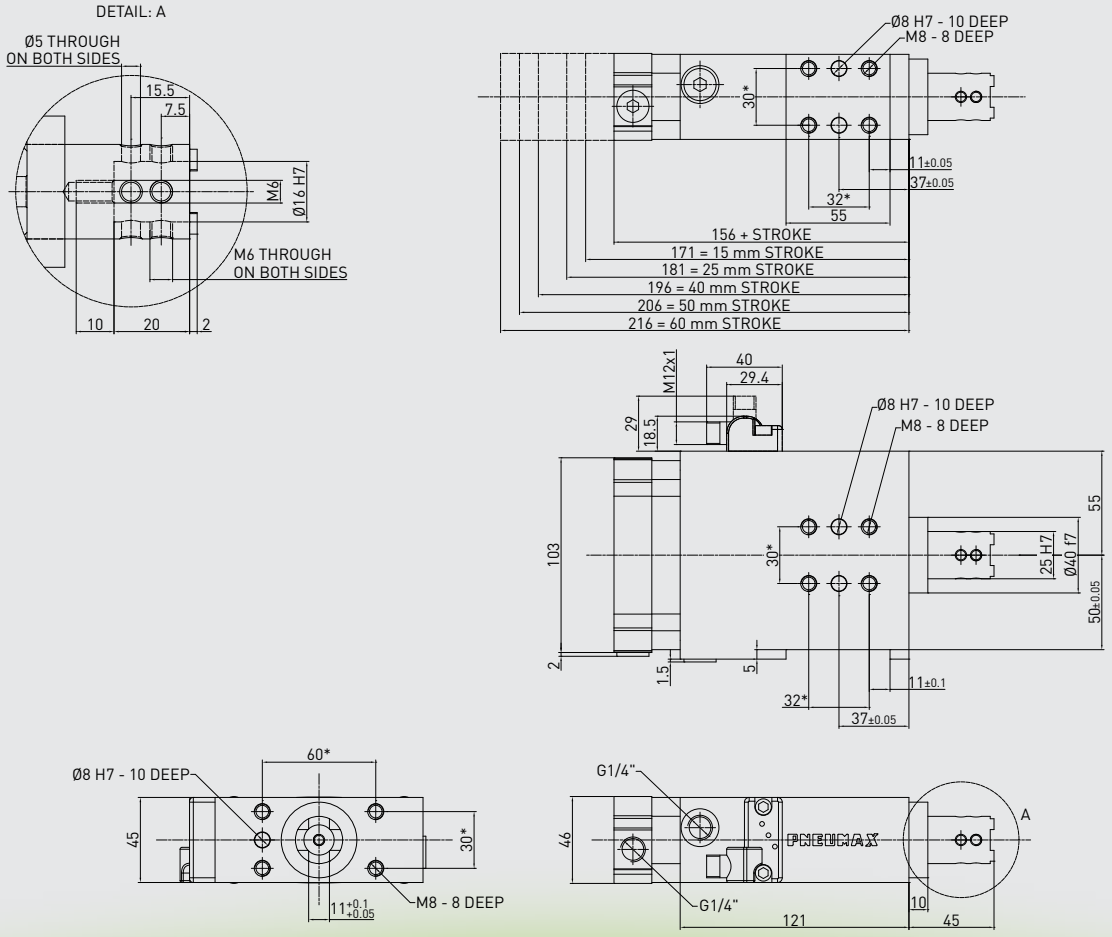

Technical features

Operating features	
Operating pressure	from 2 to 8 bar / from 30 to 115 psi
Lubrication	all the devices are lubricated for life at the factory. Inline air lubrication isn't required

RP63E_2

Retractable locating pin package

Size 63 mm

iØ 10 mm cross-cut key rod termination

WEIGHT

kg 2.45 min. stroke version

kg 2.75 max. stroke version

* DIMENSIONAL TOLERANCE FOR DOWEL HOLES: ±0.02
DIMENSIONAL TOLERANCE FOR THREADED HOLES: ±0.1

REV. 01 - 29/02/2016

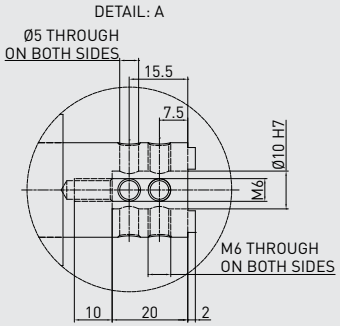

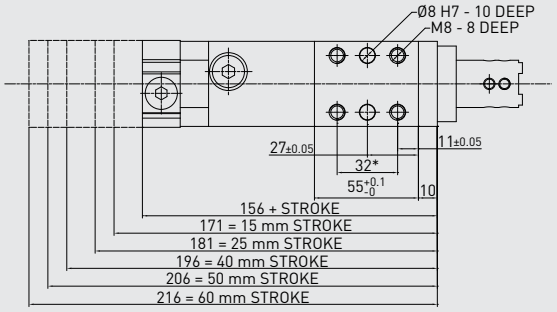

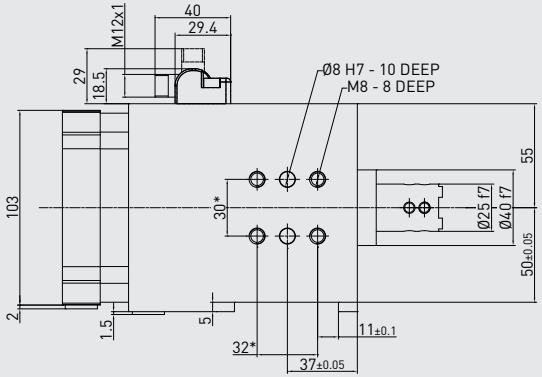

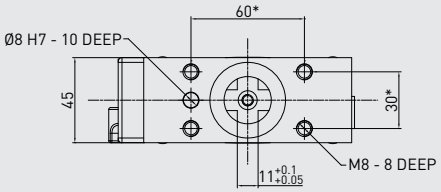

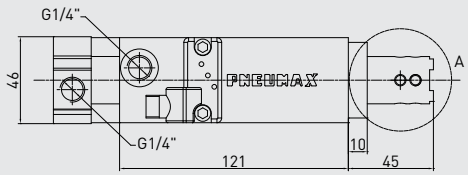

Technical features

Operating features	
Operating pressure	from 2 to 8 bar / from 30 to 115 psi
Lubrication	all the devices are lubricated for life at the factory. Inline air lubrication isn't required

Subject to change without notice

* DIMENSIONAL TOLERANCE FOR DOWEL HOLES: ±0.02
DIMENSIONAL TOLERANCE FOR THREADED HOLES: ±0.1

REV. 00 - 31/03/2015

WEIGHT

kg 2.45 min. stroke version

kg 2.75 max. stroke version

RP63E_3

Retractable locating pin package

Size 63 mm

Rod termination for offset pins

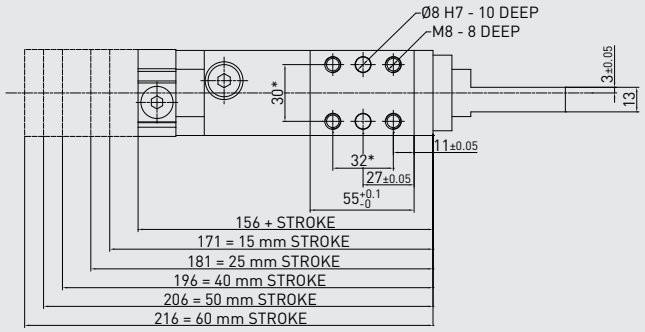

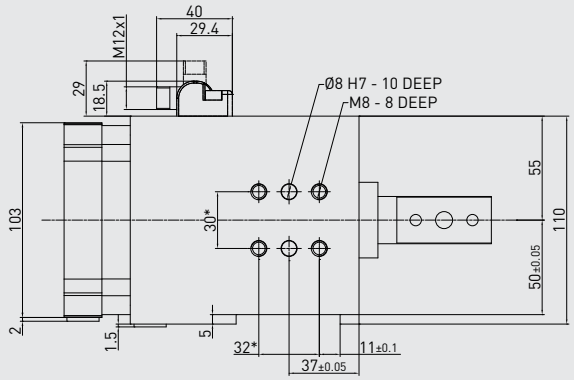

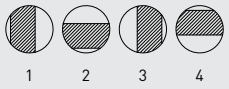

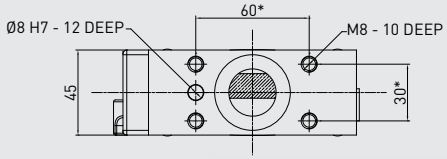

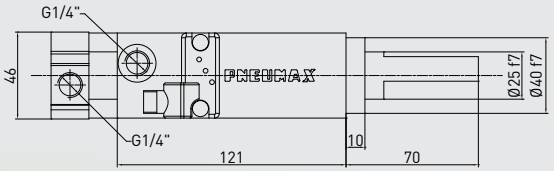

Technical features

Operating features	
Operating pressure	from 2 to 8 bar / from 30 to 115 psi
Lubrication	all the devices are lubricated for life at the factory. Inline air lubrication isn't required

RP63E_4

Retractable locating pin package

Size 63 mm

Rod termination with key

WEIGHT

kg 2.45 min. stroke version

kg 2.75 max. stroke version

* DIMENSIONAL TOLERANCE FOR DOWEL HOLES: ±0.02
DIMENSIONAL TOLERANCE FOR THREADED HOLES: ±0.1

REV. 00 - 31/03/2015

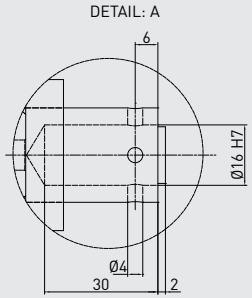

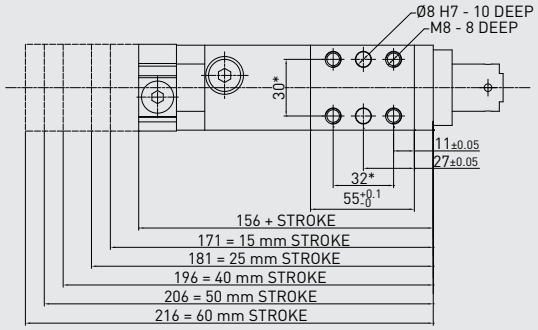

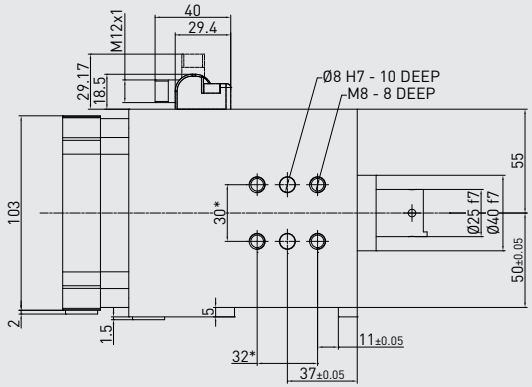

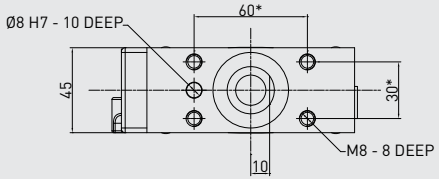

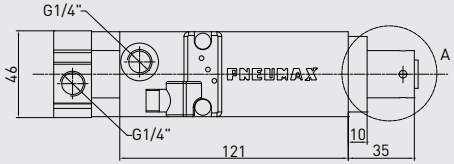

Technical features

Operating features	
Operating pressure	from 2 to 8 bar / from 30 to 115 psi
Lubrication	all the devices are lubricated for life at the factory. Inline air lubrication isn't required

Subject to change without notice

* DIMENSIONAL TOLERANCE FOR DOWEL HOLES: ±0.02
DIMENSIONAL TOLERANCE FOR THREADED HOLES: ±0.1

REV. 00 -15/03/2016

WEIGHT

kg 2.45	kg 2.75
min. stroke version	max. stroke version

RP63E_5

Retractable locating pin package

Size 63 mm

iØ 10 mm flat termination

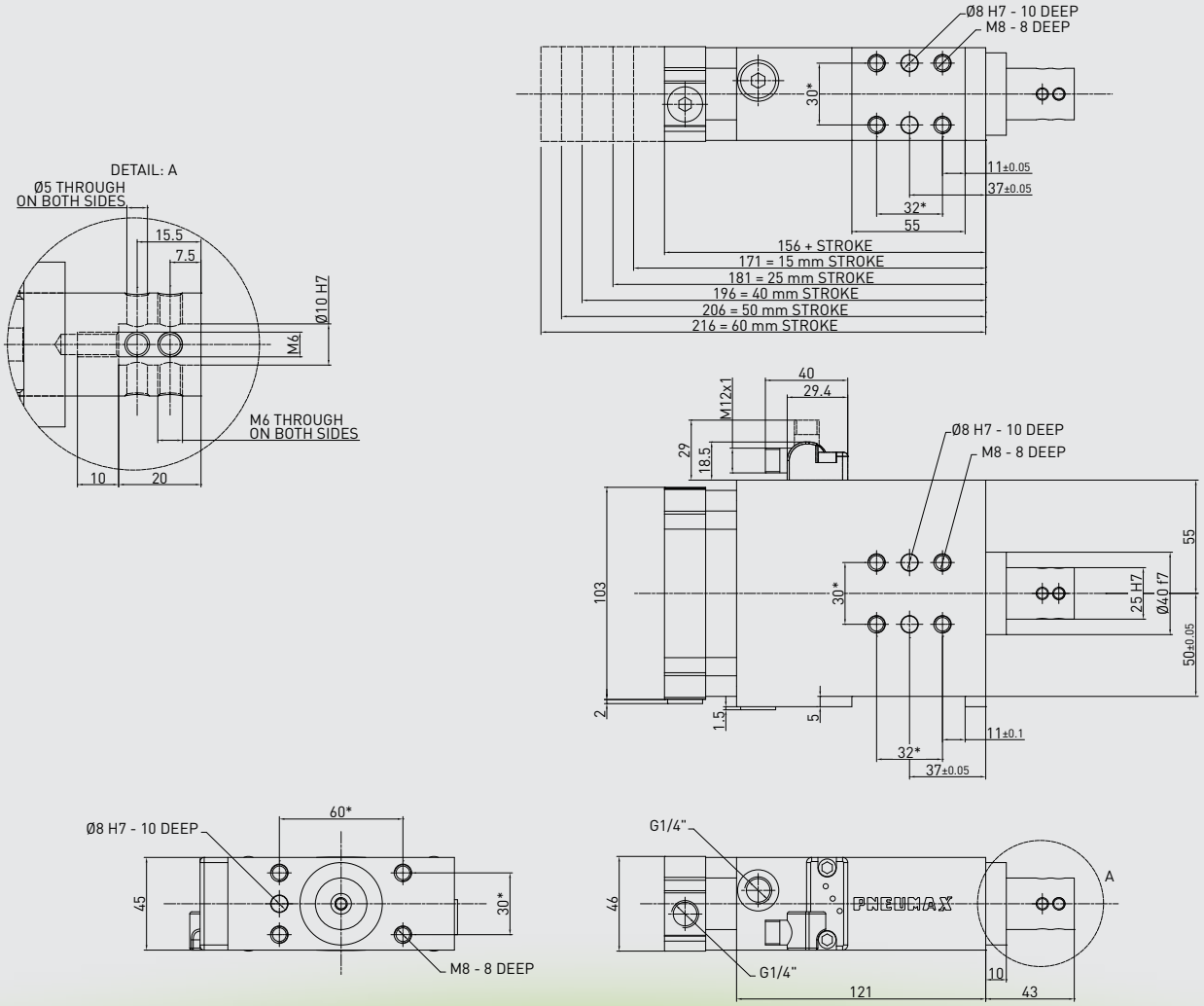

Technical features

Operating features	
Operating pressure	from 2 to 8 bar / from 30 to 115 psi
Lubrication	all the devices are lubricated for life at the factory. Inline air lubrication isn't required

RP63E_6

Retractable locating pin package

Size 63 mm

iØ 12 mm flat termination

* DIMENSIONAL TOLERANCE FOR DOWEL HOLES: ±0.02
DIMENSIONAL TOLERANCE FOR THREADED HOLES: ±0.1

REV. 00 - 15/03/2016

WEIGHT

kg 2.45 min. stroke version

kg 2.75 max. stroke version

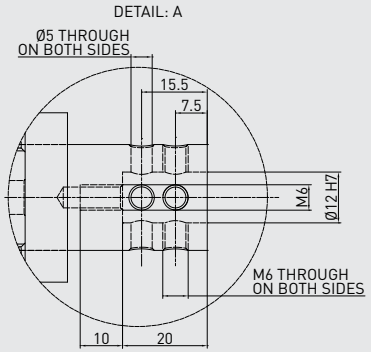

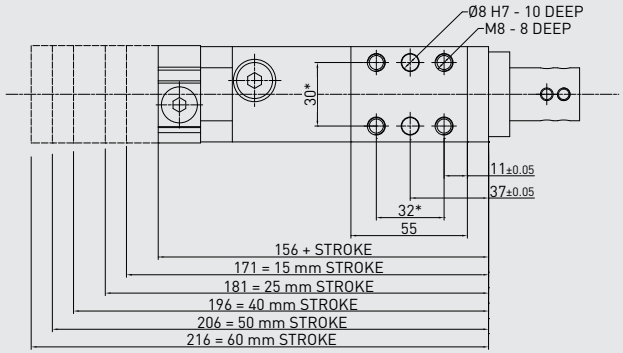

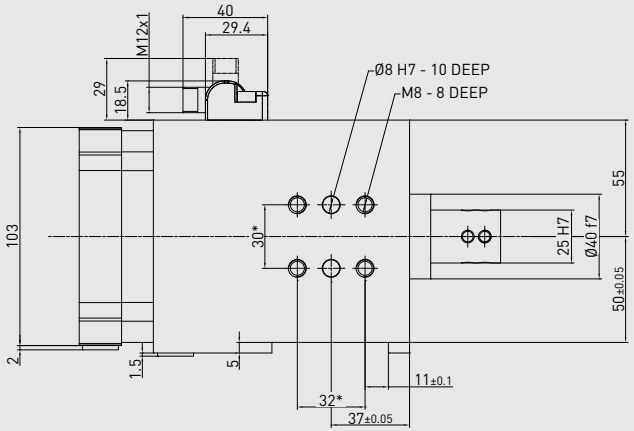

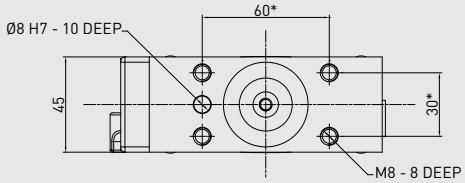

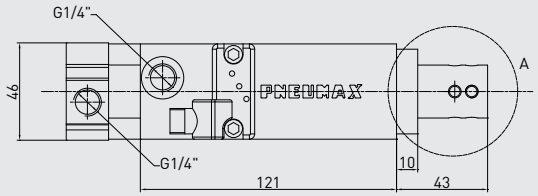

Technical features

Operating features	
Operating pressure	from 2 to 8 bar / from 30 to 115 psi
Lubrication	all the devices are lubricated for life at the factory. Inline air lubrication isn't required

Subject to change without notice

FUNCTIONAL CHARTS
SIZE 63 mm

Load position A

horizontal mounting position of the retractable locating pin/load centre on the rod

Load position B

horizontal mounting position of the retractable locating pin/load centre at 100 mm from the rod axis

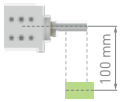

Load position C

vertical mounting position of the retractable locating pin/load centre at 100 mm from the rod axis

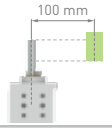

Please get in touch with our technical representatives for any application which exceeds the above values, to find the appropriate solution for your application.

Max deflection

Stroke	Load (kg)	Load position A deviation (mm)	Load position B deviation (mm)	Load position C deviation (mm)
60 mm	0.5	0.007	0.012	0.01
	1	0.013	0.025	0.023
	1.5	0.02	0.04	0.036
	2	0.03	0.053	0.049
	2.5	0.038	0.067	0.064
	3	0.045	0.082	0.075
50 mm	0.5	0.006	0.009	0.007
	1	0.013	0.02	0.018
	1.5	0.021	0.032	0.028
	2	0.026	0.047	0.043
	2.5	0.032	0.66	0.057
	3	0.037	0.075	0.068
40 mm	0.5	0.004	0.009	0.004
	1	0.009	0.02	0.009
	1.5	0.013	0.032	0.013
	2	0.018	0.047	0.018
	2.5	0.022	0.66	0.022
	3	0.026	0.075	0.026
25 mm	0.5	0	0.005	0
	1	0.005	0.015	0.005
	1.5	0.007	0.032	0.007
	2	0.011	0.047	0.011
	2.5	0.012	0.66	0.012
	3	0.014	0.075	0.014
15 mm	0.5	0	0.005	0
	1	0.002	0.018	0
	1.5	0.004	0.025	0.002
	2	0.007	0.033	0.006
	2.5	0.012	0.043	0.009
	3	0.014	0.052	0.013

Functional data (at 5 bar / 72.5 psi)

Thrust force	1,400 N
Pull force	1,555 N
Max bending moment	3 N m / 2.21 lb·ft
Max distance from the load centre to the rod	200 mm

Cycle time for max stroke < 0.8 s NO FLOW VALVE REQUIRED

Air consumption

Air consumption for complete cycle

REV. 00 - 31/03/2015

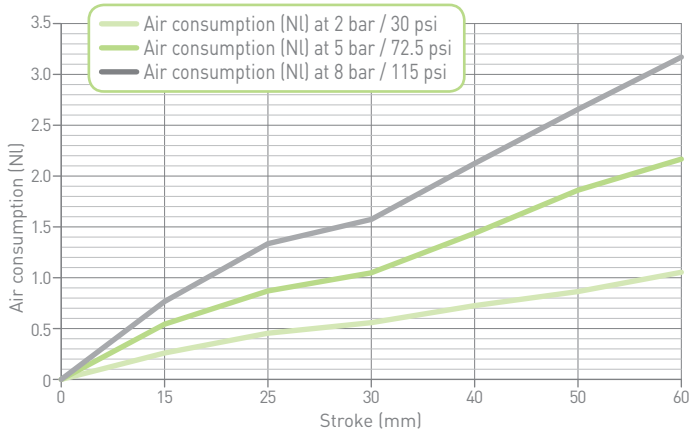

Subject to change without notice

WHY PNX

RC-SERIES

CNOMO

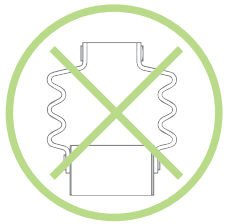

- ✔ Accurate positioning devices with **TWIN LINEAR ROD GUIDING**: 2 far apart spreaded bushings limit any deflection and improve the pin package accuracy over a longer period of time
- ✔ High Protection against weld spatter, dirt and coolants > no bellows required

- ✔ **STEEL** and **BRASS ROD SCRAPER** to prevent welding debris from entering the pin package
- ✔ **CHROME ROD COATING** as a protection against adhering weld sparks
- ✔ Maintenance free devices
- ✔ Supply ports on both sides of the cyliders_ no need to disassemble the cylinder
- ✔ Integrated anti-rotation device to reduce any free-play

ORDERING STRING
RC-SERIES CNOMO

RC | 50 | C | 25 | 1 | G

VERSION
RC = retractable locating pin package with CNOMO mounting pattern
RCD = retractable locating pin package with CNOMO mounting pattern and manual operation

SIZE
50 = Ø 50 mm
63 = Ø 63 mm

SENSOR
C = CNOMO sensor
N = no sensor

STROKE
25 = 25 mm
50 = 50 mm

ROD TERMINATION
1 = iØ 12 mm rod termination
2 = iØ 20 mm rod termination

PORTS
G = GAS

Subject to change
without notice

WEIGHT

kg 1.8 min. stroke version

kg 1.9 max. stroke version

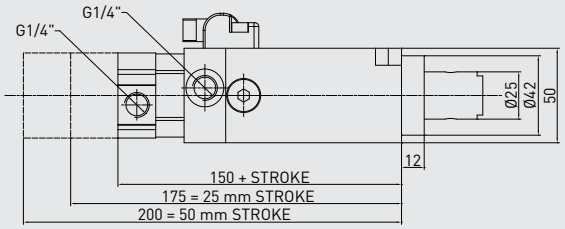

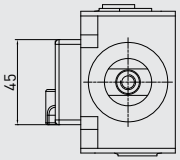

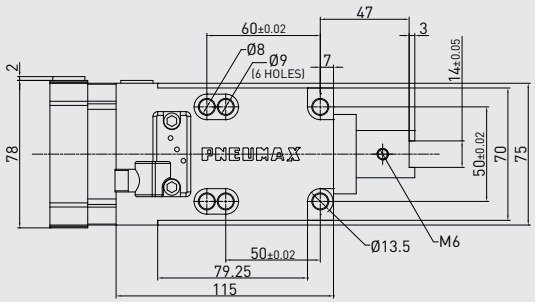

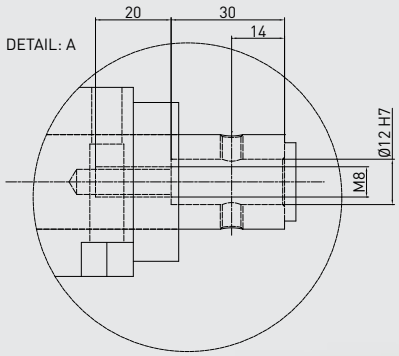

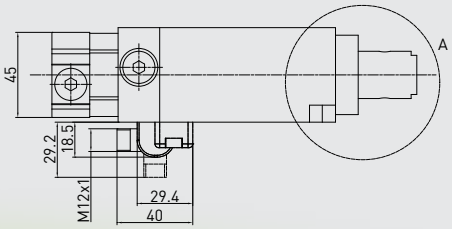

CNOMO

RC50_ _1

Retractable locating pin package with CNOMO mounting pattern

Size 50 mm

iØ 12 mm rod termination

Technical features

Operating features	
Operating pressure	from 2 to 8 bar / from 30 to 115 psi
Lubrication	all the devices are lubricated for life at the factory. Inline air lubrication isn't required

Subject to change without notice

WEIGHT

kg 2 min. stroke version

kg 2.1 max. stroke version

CNOMO

RC50_ _2

Retractable locating pin package with CNOMO mounting pattern

Size 50 mm

iØ 20 mm rod termination

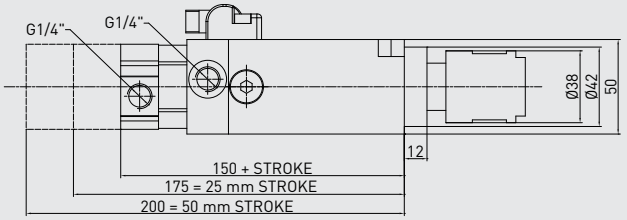

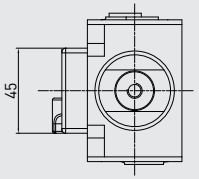

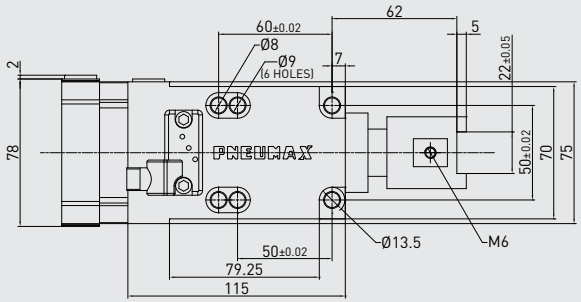

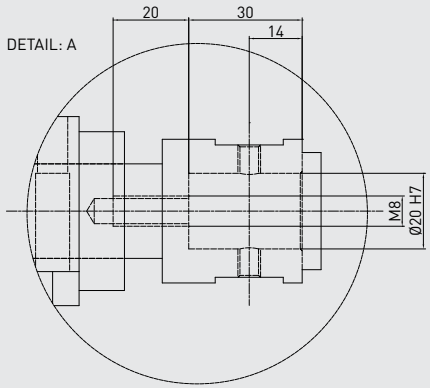

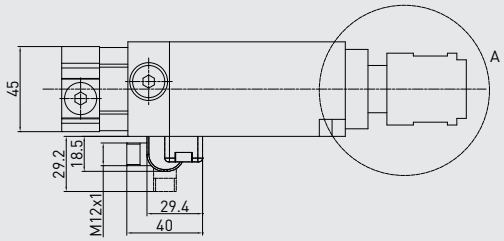

Technical features

Operating features	
Operating pressure	from 2 to 8 bar / from 30 to 115 psi
Lubrication	all the devices are lubricated for life at the factory. Inline air lubrication isn't required

Subject to change without notice

WEIGHT

kg 2 min. stroke version

kg 2.1 max. stroke version

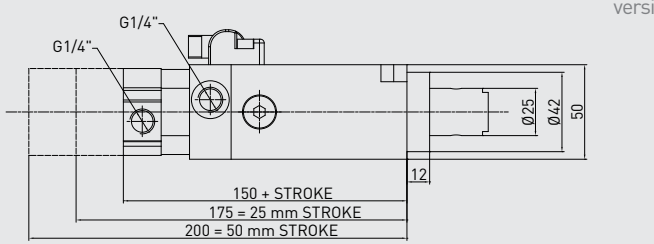

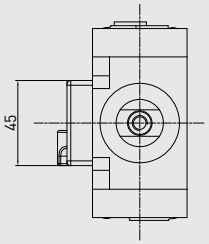

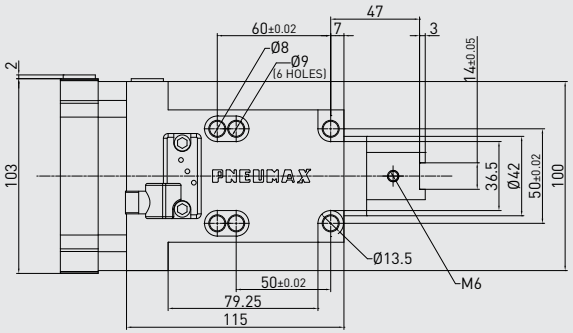

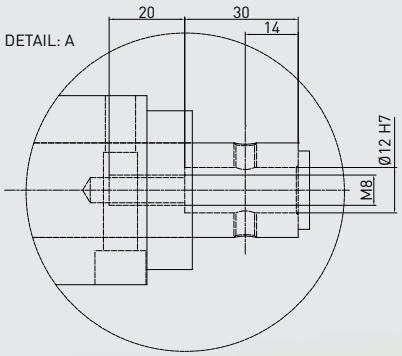

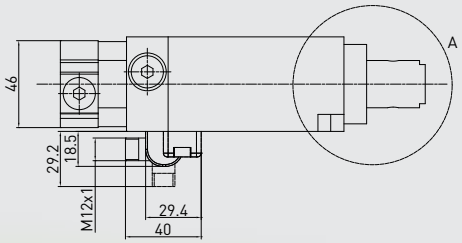

CNOMO

RC63_ _1

Retractable locating pin package with CNOMO mounting pattern

Size 63 mm

iØ 12 mm rod termination

Technical features

Operating features	
Operating pressure	from 2 to 8 bar / from 30 to 115 psi
Lubrication	all the devices are lubricated for life at the factory. Inline air lubrication isn't required

Subject to change without notice

CNOMO

RC63_ _2

Retractable locating pin package with CNOMO mounting pattern

Size 63 mm

iØ 20 mm rod termination

WEIGHT

kg 2.2 min. stroke version

kg 2.3 max. stroke version

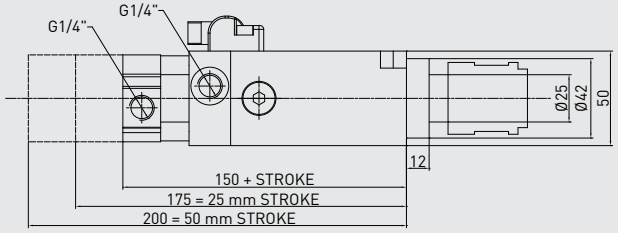

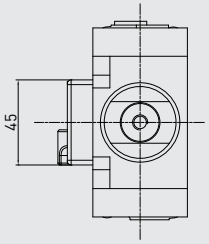

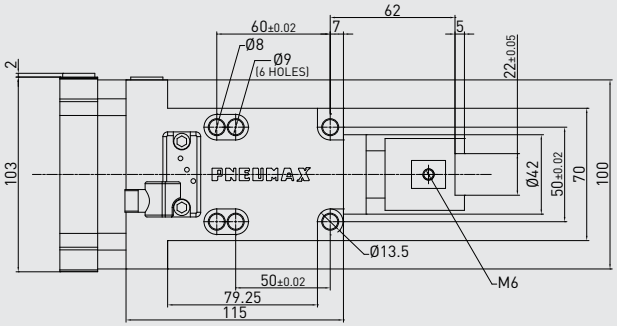

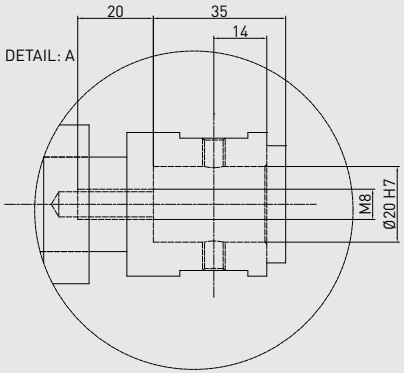

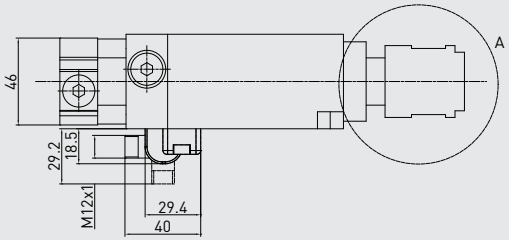

Technical features

Operating features	
Operating pressure	from 2 to 8 bar / from 30 to 115 psi
Lubrication	all the devices are lubricated for life at the factory. Inline air lubrication isn't required

Subject to change without notice

REV. 00 - 31/07/2018

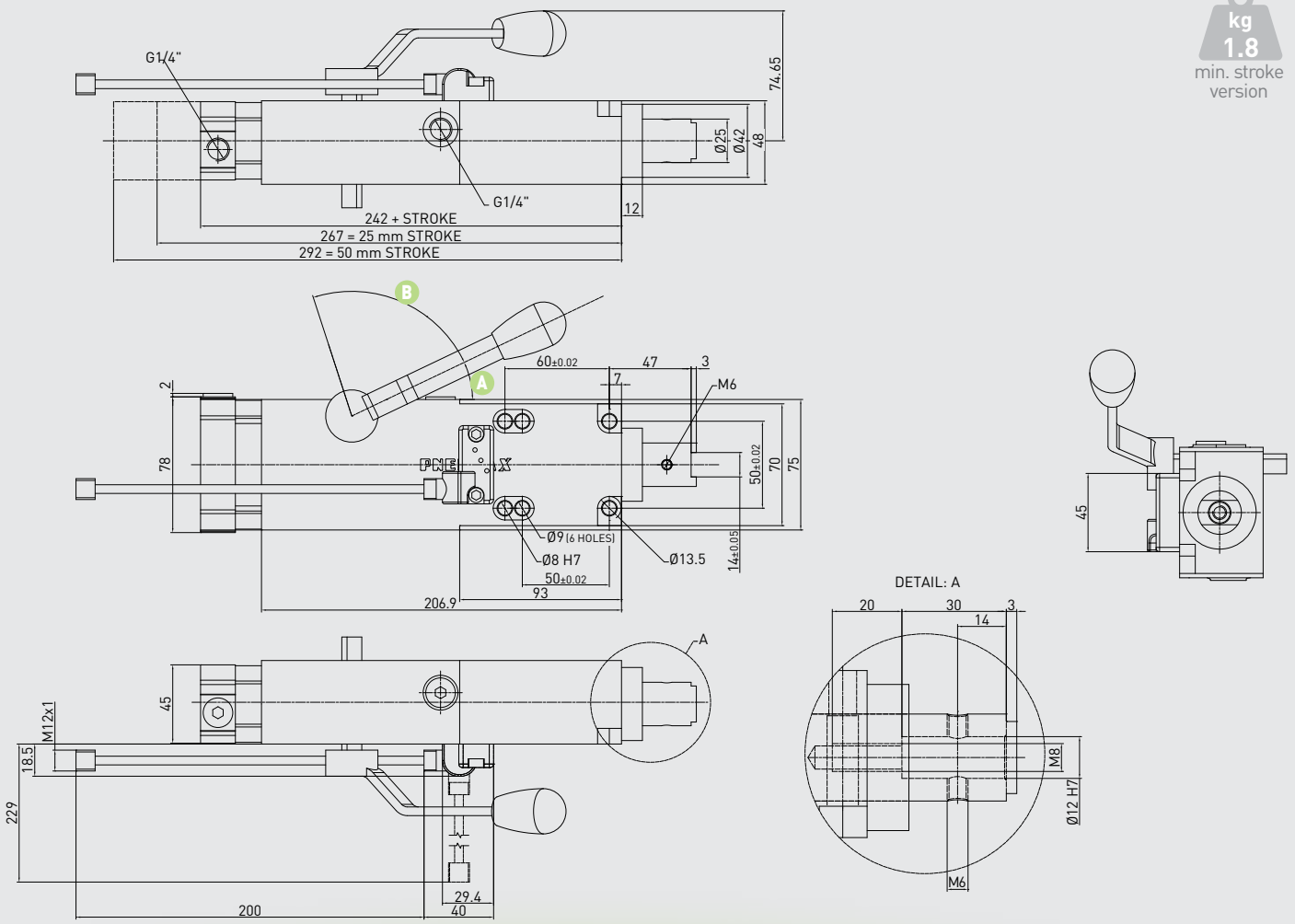

WEIGHT

kg 1.8 — min. stroke version

kg 1.9 — max. stroke version

CNOMO

RCD50_ _1

Retractable locating pin package with CNOMO mounting pattern and manual operation

Size 50 mm

iØ 12 mm rod termination

Handle swivel angle

Stroke	Handle swivel angle A	Handle swivel angle B
25	70°	38°
50	25°	83°

Technical features

Operating features	
Operating pressure	from 2 to 8 bar / from 30 to 115 psi
Lubrication	all the devices are lubricated for life at the factory. Inline air lubrication isn't required

Subject to change without notice

WEIGHT

kg 2 min. stroke version

kg 2.1 max. stroke version

CNOMO

RCD50_ _2

Retractable locating pin package with CNOMO mounting pattern and manual operation

Size 50 mm

iØ 20 mm rod termination

Handle swivel angle

Stroke	Handle swivel angle A	Handle swivel angle B
25	70°	38°
50	25°	83°

Technical features

Operating features	
Operating pressure	from 2 to 8 bar / from 30 to 115 psi
Lubrication	all the devices are lubricated for life at the factory. Inline air lubrication isn't required

Subject to change without notice

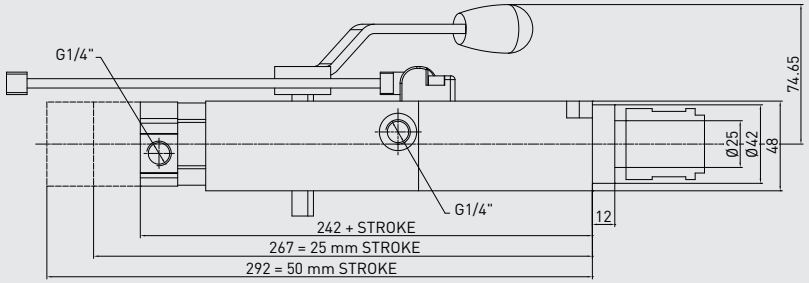

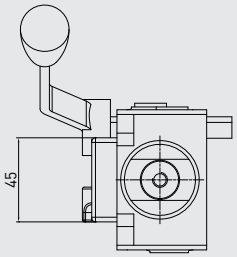

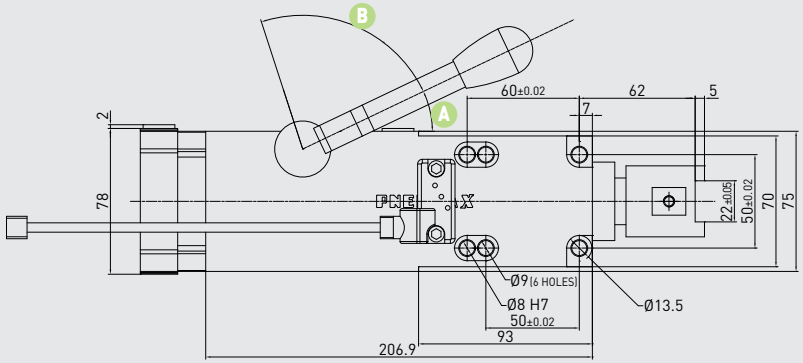

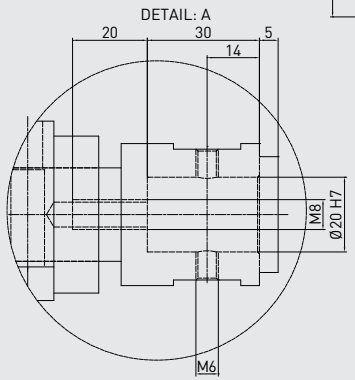

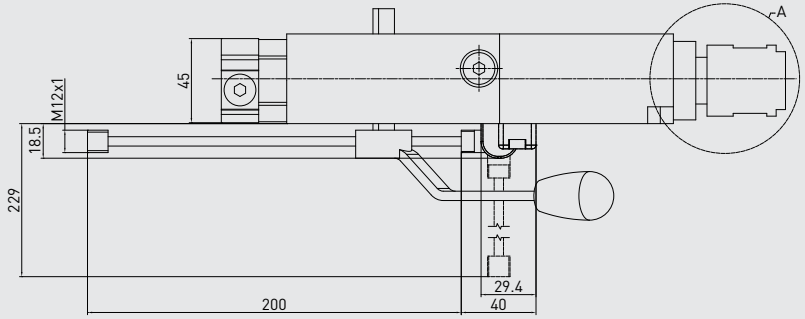

WEIGHT

kg 2 min. stroke version

kg 2.1 max. stroke version

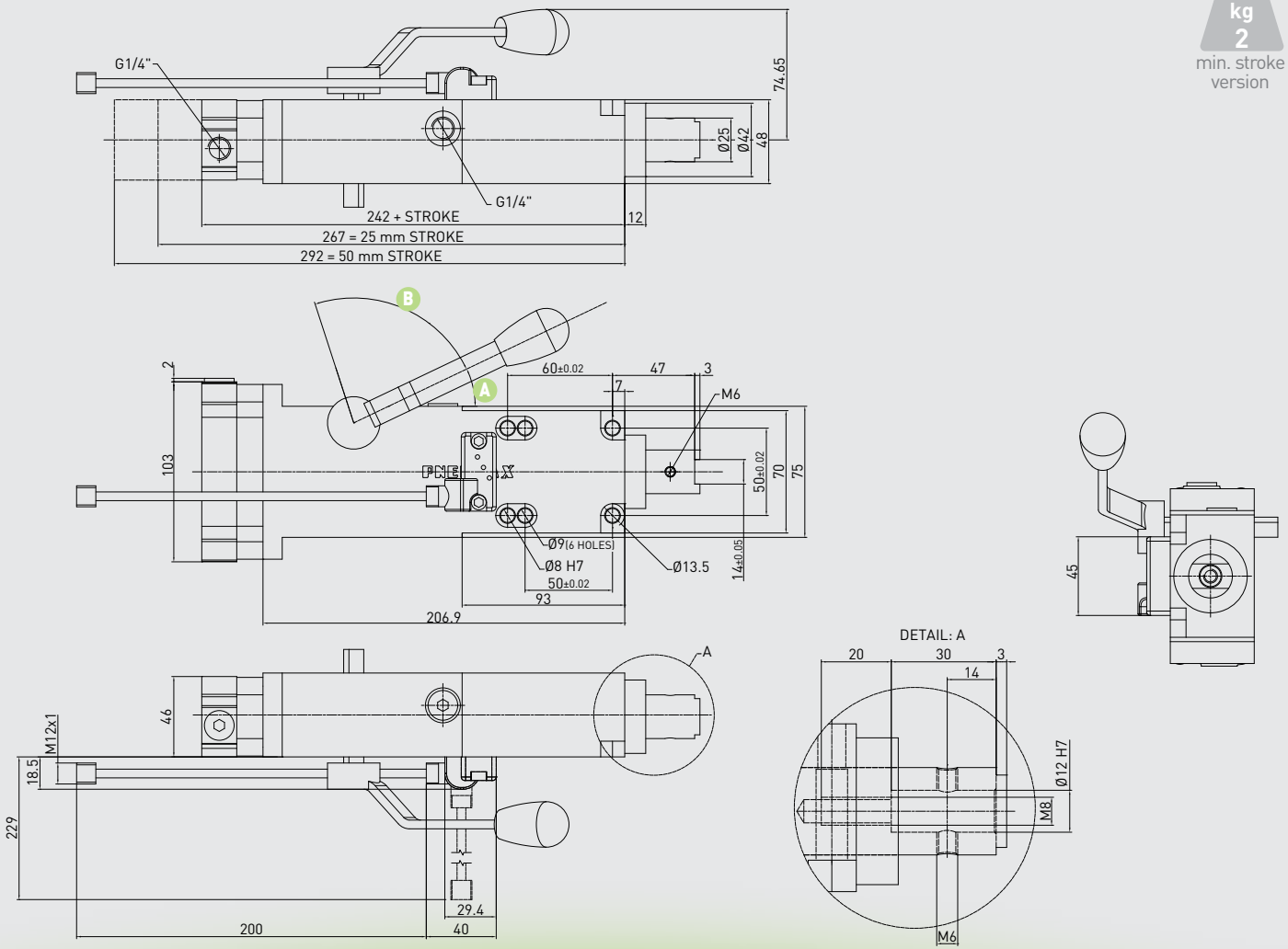

CNOMO

RCD63_ _1

Retractable locating pin package with CNOMO mounting pattern and manual operation

Size 63 mm

iØ 12 mm rod termination

Handle swivel angle

Stroke	Handle swivel angle A	Handle swivel angle B
25	70°	38°
50	25°	83°

Technical features

Operating features	
Operating pressure	from 2 to 8 bar / from 30 to 115 psi
Lubrication	all the devices are lubricated for life at the factory. Inline air lubrication isn't required

Subject to change without notice

WEIGHT

kg 2.2 min. stroke version

kg 2.3 max. stroke version

CNOMO

RCD63_ _2

Retractable locating pin package with CNOMO mounting pattern and manual operation

Size 63 mm

iØ 20 mm rod termination

Handle swivel angle

Stroke	Handle swivel angle A	Handle swivel angle B
25	70°	38°
50	25°	83°

Technical features

Operating features	
Operating pressure	from 2 to 8 bar / from 30 to 115 psi
Lubrication	all the devices are lubricated for life at the factory. Inline air lubrication isn't required

Subject to change without notice

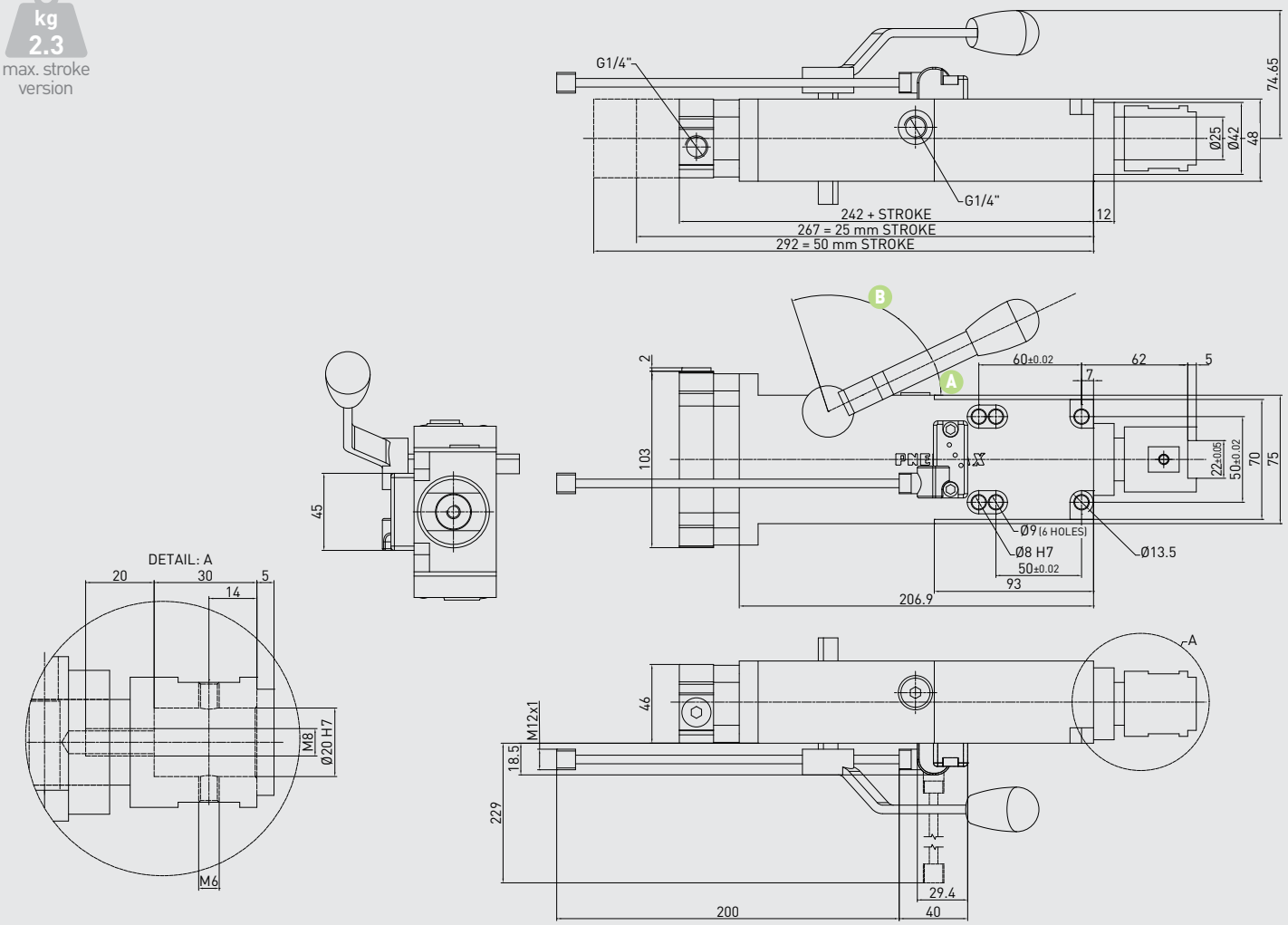

FUNCTIONAL CHARTS
RC/RCD-SERIES

Load position A

horizontal mounting position of the retractable locating pin/load centre on the rod

Load position B

horizontal mounting position of the retractable locating pin/load centre at 100 mm from the rod axis

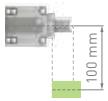

Load position C

vertical mounting position of the retractable locating pin/load centre at 100 mm from the rod axis

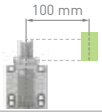

Load position D

100 mm in z

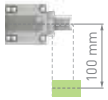

Max deflection Ø50 and 63 mm

Stroke	Load (kg)	Load position A deviation (mm)	Load position B deviation (mm)	Load position C deviation (mm)
50 mm	0.5	0.006	0.009	0.007
	1	0.013	0.02	0.018
	1.5	0.021	0.032	0.028
	2	0.026	0.047	0.043
	2.5	0.032	0.66	0.057
	3	0.037	0.075	0.068
25 mm	0.5	0	0.005	0
	1	0.005	0.015	0.005
	1.5	0.007	0.032	0.007
	2	0.011	0.047	0.011
	2.5	0.012	0.66	0.012
	3	0.014	0.075	0.014

Max deflection Ø50 and 63 mm

Stroke	Load (kg)	Load position D deviation (mm)
50 mm	0.5	0.03
	1	0.07
	1.5	0.1
	2	0.12
25 mm	0.5	0.01
	1	0.03
	1.5	0.06
	2	0.08

Please get in touch with our technical representatives for any application which exceeds the above values, to find the appropriate solution for your application.

Subject to change without notice

FUNCTIONAL CHARTS
RC/RCD-SERIES

Functional data (at 5 bar / 72.5 psi)

	Ø50	Ø63
Thrust force	825 N	1,400 N
Pull force	980 N	1,555 N
Max bending moment	3 N m / 2.21 lb·ft	3 N m / 2.21 lb·ft
Max distance from the load centre to the rod	200 mm	200 mm
Interchangeability of the mounting	± 0,05 mm	
Interchangeability of the mounting to the rod termination	± 0,15 mm	
Rod output repeatability	± 0,04 mm	
Protection degree:	IP 56 for pin packages IP67 for sensor	
Operating temperature	-0 °C + 50 °C	
Storage temperature	-25 °C + 60 °C	

Cycle time for max stroke	< 0.8 s NO FLOW VALVE REQUIRED

MOUNTING SPECIFICATIONS (Ø50 - Ø63)

Suggested planarity of the mounting bracket	⩽ 0,2 mm
Dowels	2 dia. 8 mm dowels
Screws tightening torque	25 N m

Air consumption Ø50

Air consumption for complete cycle

REV. 00 - 31/03/2015

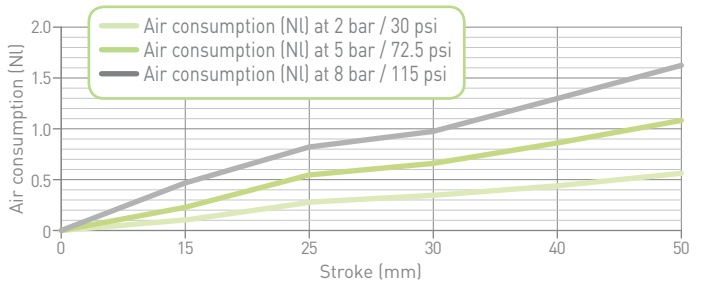

Air consumption Ø63

Air consumption for complete cycle

REV. 00 - 31/03/2015

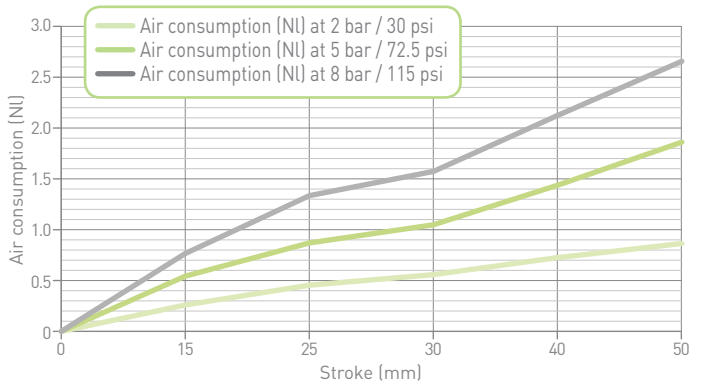

Subject to change
without notice

HIGH PERFORMANCE
HP-SERIES

Higher level of **pull force**,

for all the applications where due to metal sheet tolerances, a higher level of force is required during the retracting movement, in order to disengage to the pin.

This solution is highly efficient for all the **applications** when **tensions** arise **in the metal sheet** during the machining process. Equipped with a **tandem cylinder** to improve the pull force.

COMPACT DESIGN

Even though these pin packages are equipped with a tandem cylinder, their overall dimensions still remain in line with the state of the art.

REPETITION ACCURACY

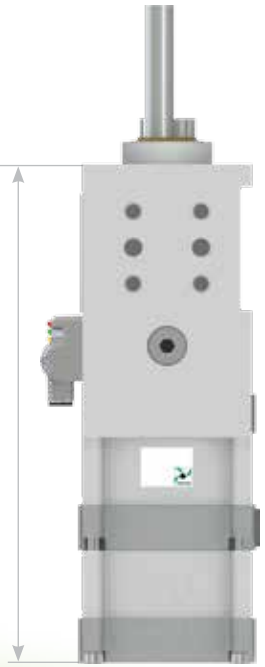

ORDERING STRING HP-SERIES

HP | 50 | E | 40 | 3 | D

VERSION

HP = High Performance retractable locating pin package

SIZE

50 = Ø 50 mm

SENSOR

E = electronic sensor with M12 swivel connector - PNP
A = electronic sensor with M12 swivel connector - NPN
N = no sensor
B = electronic sensor with M8 swivel connector - PNP

STROKE

15 = 15 mm
25 = 25 mm
40 = 40 mm
50 = 50 mm
60 = 60 mm

ROD TERMINATION

1 = iØ 16 mm cross-cut key rod termination
2 = iØ 10 mm cross-cut key rod termination
3 = rod termination for offset pins
4 = rod termination with key
5 = iØ 10 mm flat termination
6 = iØ 12 mm flat termination

PORTS

G = GAS
D = dual GAS ports on rear end cap

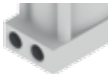

ROD ORIENTATION (FOR TERMINATION TYPE 3)

1 =
2 =
3 =
4 =

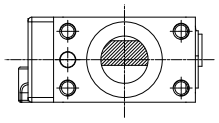

Subject to change without notice

* DIMENSIONAL TOLERANCE FOR DOWEL HOLES: ±0.02
DIMENSIONAL TOLERANCE FOR THREADED HOLES: ±0.1

REV. 01 - 26/02/2016

WEIGHT

kg 2.2 min. stroke version

kg 2.5 max. stroke version

HP50E_1

High Performance retractable locating pin package

Size 50 mm

iØ 16 mm cross-cut key rod termination

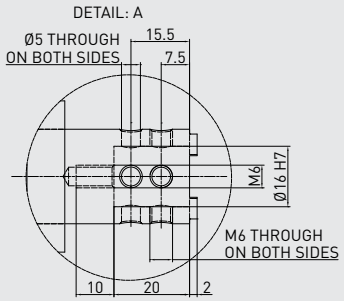

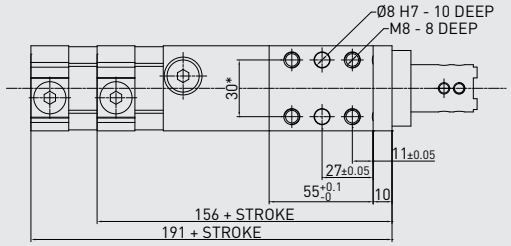

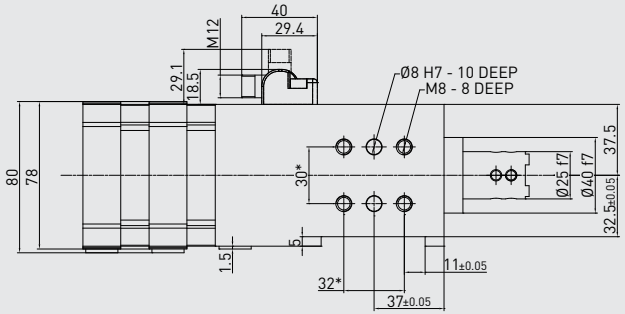

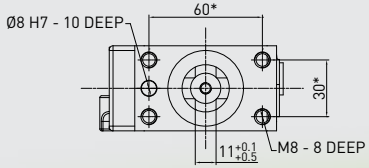

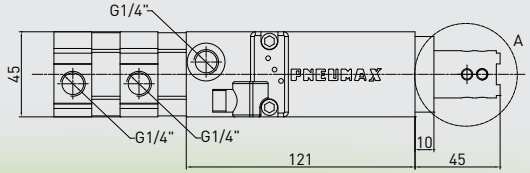

Technical features

Operating features	
Operating pressure	from 2 to 8 bar / from 30 to 115 psi
Lubrication	all the devices are lubricated for life at the factory. Inline air lubrication isn't required

Subject to change without notice

HP50E_2

High Performance retractable locating pin package

Size 50 mm

iØ 10 mm cross-cut key rod termination

WEIGHT

kg 2.2 min. stroke version

kg 2.5 max. stroke version

* DIMENSIONAL TOLERANCE FOR DOWEL HOLES: ±0.02
DIMENSIONAL TOLERANCE FOR THREADED HOLES: ±0.1

REV. 01 - 26/02/2016

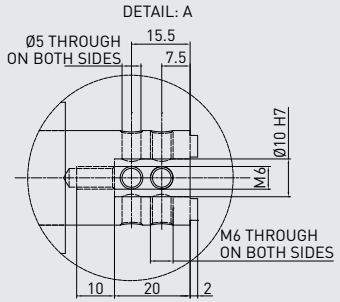

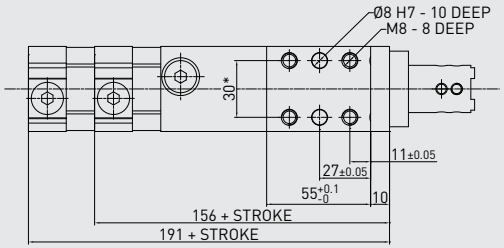

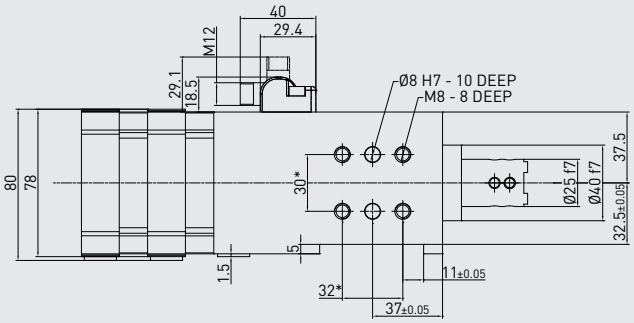

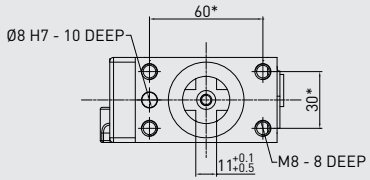

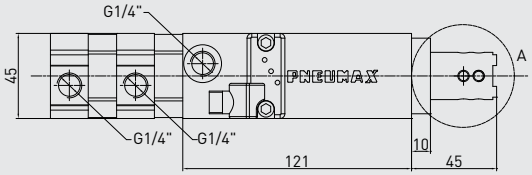

Technical features

Operating features	
Operating pressure	from 2 to 8 bar / from 30 to 115 psi
Lubrication	all the devices are lubricated for life at the factory. Inline air lubrication isn't required

Subject to change without notice

* DIMENSIONAL TOLERANCE FOR DOWEL HOLES: ±0.02
DIMENSIONAL TOLERANCE FOR THREADED HOLES: ±0.1

REV. 00 - 31/03/2015

WEIGHT

kg 2.2 min. stroke version

kg 2.5 max. stroke version

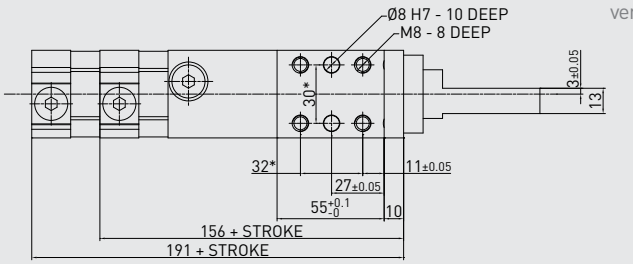

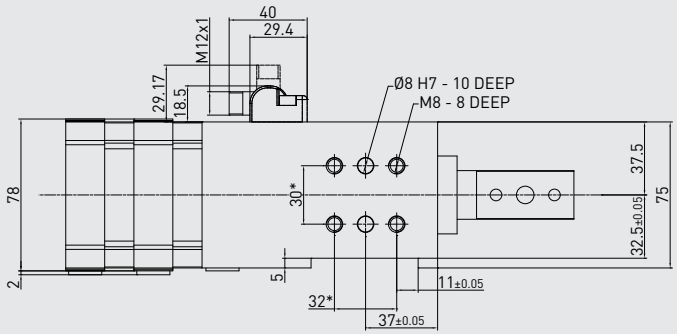

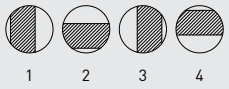

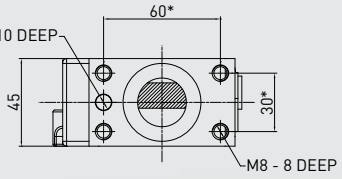

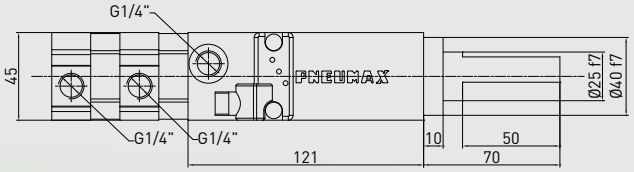

HP50E_3

High Performance retractable locating pin package

Size 50 mm

Rod termination for offset pins

Technical features

Operating features	
Operating pressure	from 2 to 8 bar / from 30 to 115 psi
Lubrication	all the devices are lubricated for life at the factory. Inline air lubrication isn't required

Subject to change without notice

HP50E_4

High Performance retractable locating pin package

Size 50 mm

Rod termination with key

* DIMENSIONAL TOLERANCE FOR DOWEL HOLES: ±0.02
DIMENSIONAL TOLERANCE FOR THREADED HOLES: ±0.1

REV. 00 - 31/03/2015

WEIGHT

kg 2.2 min. stroke version

kg 2.5 max. stroke version

DETAIL: A

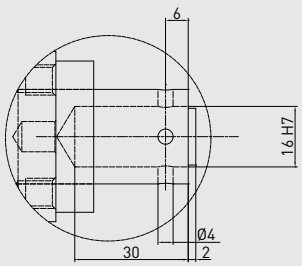

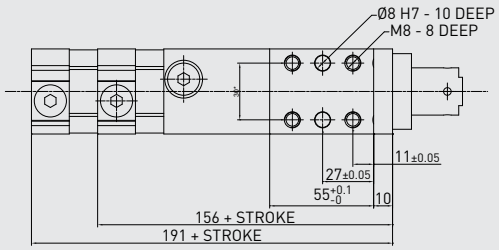

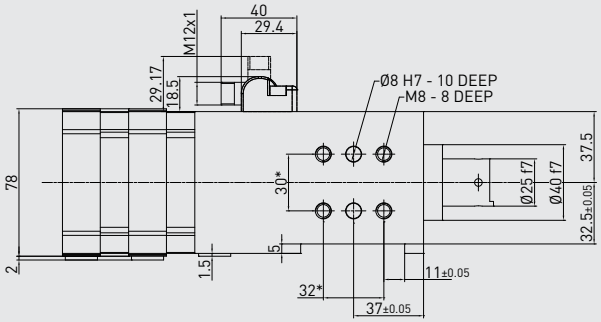

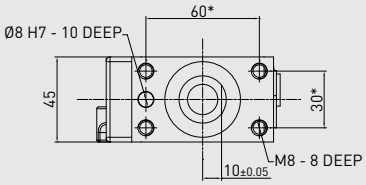

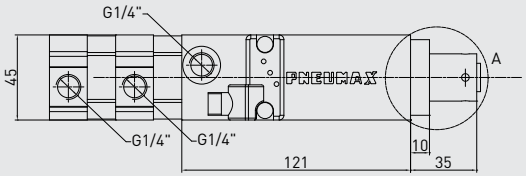

Technical features

Operating features	
Operating pressure	from 2 to 8 bar / from 30 to 115 psi
Lubrication	all the devices are lubricated for life at the factory. Inline air lubrication isn't required

Subject to change without notice

FUNCTIONAL CHARTS
SIZE 50 mm

Load position A

horizontal mounting position of the retractable locating pin/load centre on the rod

Load position B

horizontal mounting position of the retractable locating pin/load centre at 100 mm from the rod axis

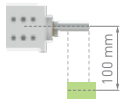

Load position C

vertical mounting position of the retractable locating pin/load centre at 100 mm from the rod axis

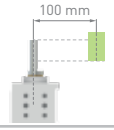

Please get in touch with our technical representatives for any application which exceeds the above values, to find the appropriate solution for your application.

Max deflection

Stroke	Load (kg)	Load position A deviation (mm)	Load position B deviation (mm)	Load position C deviation (mm)
60 mm	0.5	0.007	0.012	0.01
	1	0.013	0.025	0.023
	1.5	0.02	0.04	0.036
	2	0.03	0.053	0.049
	2.5	0.038	0.067	0.064
	3	0.045	0.082	0.075
50 mm	0.5	0.006	0.009	0.007
	1	0.013	0.02	0.018
	1.5	0.021	0.032	0.028
	2	0.026	0.047	0.043
	2.5	0.032	0.66	0.057
	3	0.037	0.075	0.068
40 mm	0.5	0.004	0.009	0.004
	1	0.009	0.02	0.009
	1.5	0.013	0.032	0.013
	2	0.018	0.047	0.018
	2.5	0.022	0.66	0.022
	3	0.026	0.075	0.026
25 mm	0.5	0	0.005	0
	1	0.005	0.015	0.005
	1.5	0.007	0.032	0.007
	2	0.011	0.047	0.011
	2.5	0.012	0.66	0.012
	3	0.014	0.075	0.014
15 mm	0.5	0	0.005	0
	1	0.002	0.018	0
	1.5	0.004	0.025	0.002
	2	0.007	0.033	0.006
	2.5	0.012	0.043	0.009
	3	0.014	0.052	0.013

Functional data (at 5 bar / 72.5 psi)

Thrust force	825 N
Pull force	1,960 N
Max bending moment	3 N m / 2.21 lb·ft
Max distance from the load centre to the rod	200 mm

Cycle time for max stroke

< 0.8 s NO FLOW VALVE REQUIRED

Air consumption

Air consumption for complete cycle

REV. 00 - 31/03/2015

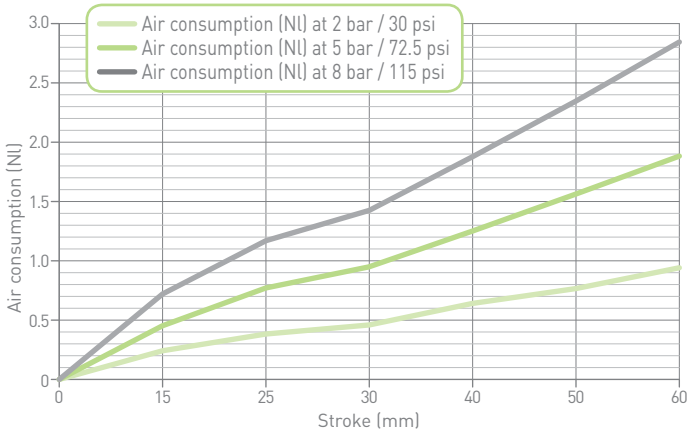

Subject to change without notice

ADVANTAGES

RETRACTABLE LOCATING PIN PACKAGES WITH DUAL RODS

- ✔ Extra light product: **20%** lighter than competing solutions
- ✔ Extremely low deflection value
- ✔ Higher side load acceptance
- ✔ Designed and manufactured to maximize durability and performance: robust and reliable
- ✔ 180° rod orientation
- ✔ Metal rod scrapers for long life in the toughest environments: for a reliable removing of any trace of weld slag from the heat treated rods
- ✔ No galling > maximum process reliability

ORDERING STRING
F-SERIES 40

F | P | 40 | E | 20 | 3 | D

VERSION
F = retractable locating pin package with dual rod

OPERATION
P = pneumatic

SIZE
40 = Ø 40 mm mounting pattern 35x25 mm
41 = Ø 40 mm mounting pattern 30x25 mm

SENSOR
E = electronic sensor with M12 swivel connector - PNP
A = electronic sensor with M12 swivel connector - NPN
N = no sensor
B = electronic sensor with M8 swivel connector - PNP

STROKE
20 = 20 mm
40 = 40 mm

ROD TERMINATION
1 = rod termination type 3 with improved radius
2 = rod termination type 7 with improved radius
3 = rod termination for offset pins
7 = rod termination for offset pins – with 4 dowel holes (see datasheet)

PORTS
G = GAS
D = dual GAS ports on rear end cap

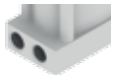

Subject to change without notice

FP40E__1/2/3/7

Retractable locating pin package with dual rod

Size 40 mm

Mounting pattern
35x25 mm

Rod termination
for offset pins

With improved radius for demanding applications

WEIGHT

kg 1.1 — min. stroke version

kg 1.25 — max. stroke version

* DIMENSIONAL TOLERANCE FOR DOWEL HOLES: ±0.02
DIMENSIONAL TOLERANCE FOR THREADED HOLES: ±0.1

REV. 02 - 28/06/2018

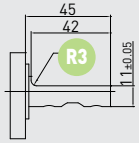

ROD TERMINATION TYPE 1

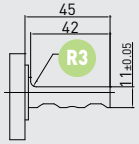

ROD TERMINATION TYPE 2

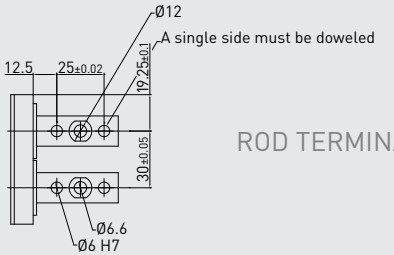

ROD TERMINATION TYPE 3

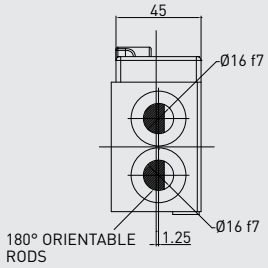

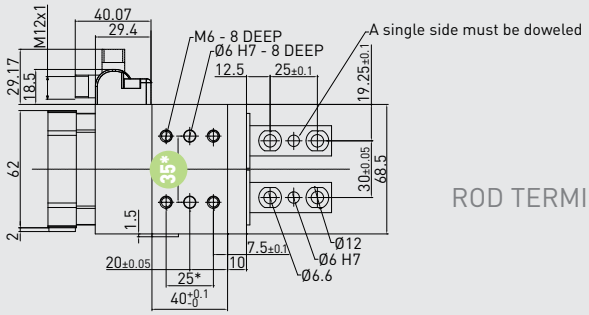

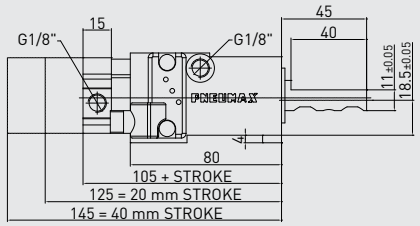

ROD TERMINATION TYPE 7

Technical features

Operating features	
Operating pressure	from 2 to 8 bar / from 30 to 115 psi
Lubrication	all the devices are lubricated for life at the factory. Inline air lubrication isn't required

Subject to change without notice

* DIMENSIONAL TOLERANCE FOR DOWEL HOLES: ±0.02
DIMENSIONAL TOLERANCE FOR THREADED HOLES: ±0.1

REV. 01 06/04/2017

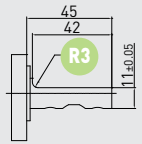

ROD TERMINATION TYPE 1

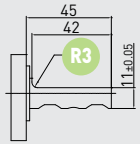

ROD TERMINATION TYPE 2

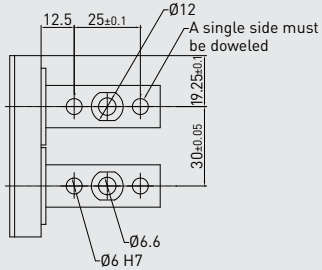

ROD TERMINATION TYPE 3

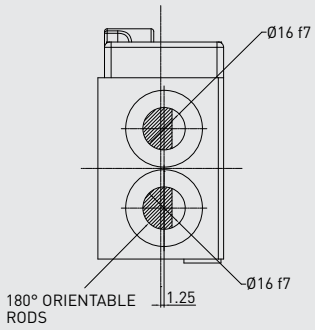

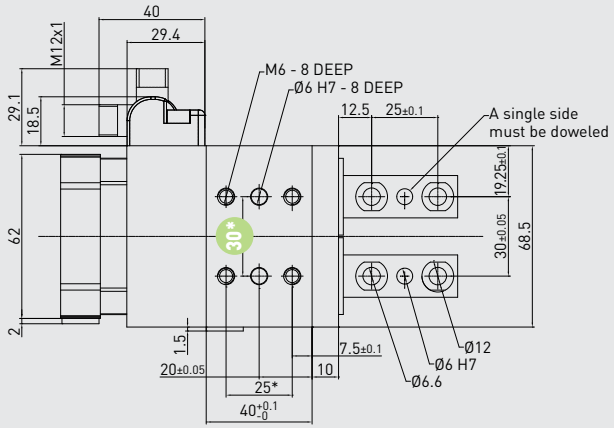

ROD TERMINATION TYPE 7

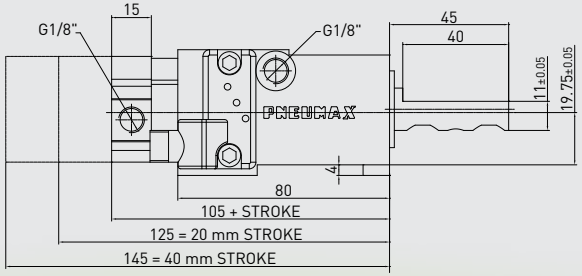

FP41E__1/2/3/7

Retractable locating pin package with dual rod

Size 41 mm

Mounting pattern **30**x25 mm

Rod termination for offset pins

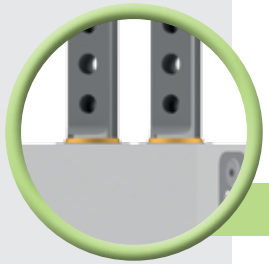

With improved radius for demanding applications

Technical features

Operating features	
Operating pressure	from 2 to 8 bar / from 30 to 115 psi
Lubrication	all the devices are lubricated for life at the factory. Inline air lubrication isn't required

Subject to change without notice

FUNCTIONAL CHARTS
SIZE 40-41 mm

Load position A

horizontal mounting position of the retractable locating pin/load centre on the rod

Load position B

horizontal mounting position of the retractable locating pin/load centre at 100 mm from the rod axis

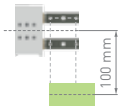

Load position C

vertical mounting position of the retractable locating pin/load centre at 100 mm from the rod axis

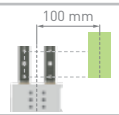

Please get in touch with our technical representatives for any application which exceeds the above values, to find the appropriate solution for your application.

Subject to change without notice

Max deflection

Stroke	Load (kg)	Load position A deviation (mm)	Load position B deviation (mm)	Load position C deviation (mm)
40 mm	0.5	0.004	0.021	0.003
	1	0.01	0.05	0.01
	1.5	0.015	0.08	0.019
	2	0.022	0.122	0.028
	2.5	0.03	0.158	0.037
	3	0.035	0.195	0.046
20 mm	0.5	0.004	0.013	0.005
	1	0.009	0.035	0.008
	1.5	0.013	0.053	0.011
	2	0.017	0.083	0.017
	2.5	0.021	0.107	0.021
	3	0.026	0.13	0.025

Functional data (at 5 bar / 72.5 psi)

Thrust force	430 N
Pull force	630 N
Max bending moment	3 N m / 2.21 lb·ft
Max distance from the load centre to the rod	200 mm

Cycle time for max stroke < 0.8 s NO FLOW VALVE REQUIRED

Air consumption

Air consumption for complete cycle

REV. 00 - 31/03/2015

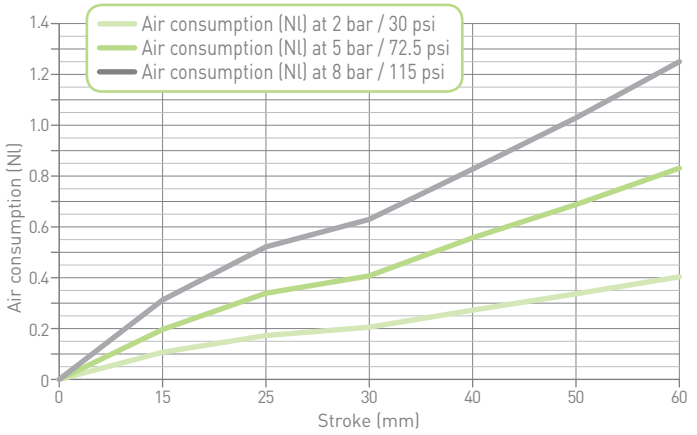

ORDERING STRING
F-SERIES 63

F	P	63	E	60	3	D

VERSION
F = retractable locating pin package with dual rod

OPERATION
P = pneumatic

SIZE
63 = Ø 63 mm

SENSOR
E = electronic sensor with M12 swivel connector - PNP
A = electronic sensor with M12 swivel connector - NPN
N = no sensor
B = electronic sensor with M8 swivel connector - PNP

STROKE
15 = 15 mm
25 = 25 mm
40 = 40 mm
50 = 50 mm
60 = 60 mm

ROD TERMINATION
1 = rod termination type 3 with improved radius
3 = rod termination for offset pins

PORTS
G = GAS
D = dual GAS ports on rear end cap

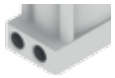

Subject to change without notice

FP63E__1/3

Retractable locating pin package with dual rod

Size 63 mm

Rod termination for offset pins

With improved radius for demanding applications

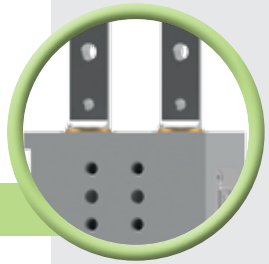

Technical features

Operating features	
Operating pressure	from 2 to 8 bar / from 30 to 115 psi
Lubrication	all the devices are lubricated for life at the factory. Inline air lubrication isn't required

Subject to change without notice

WEIGHT

kg 3.35 min. stroke version

kg 3,65 max. stroke version

* DIMENSIONAL TOLERANCE FOR DOWEL HOLES: ±0.02
DIMENSIONAL TOLERANCE FOR THREADED HOLES: ±0.1

REV. 01 - 10/04/2017

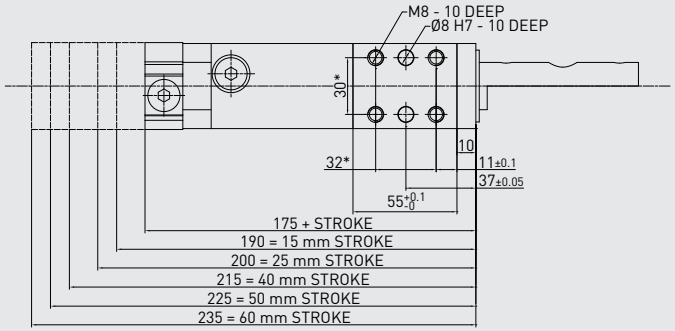

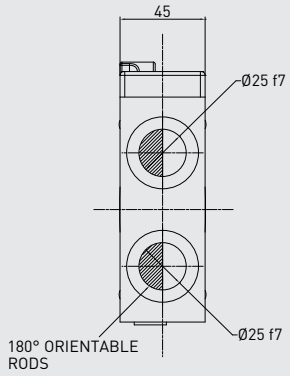

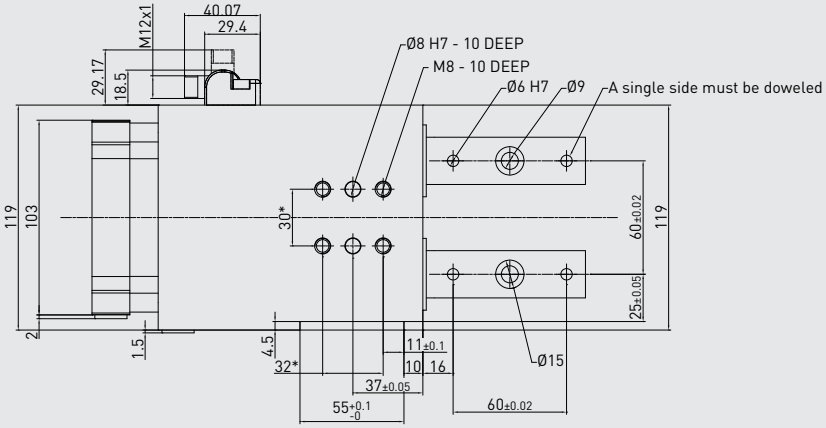

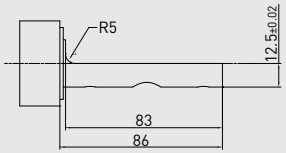

ROD TERMINATION 1

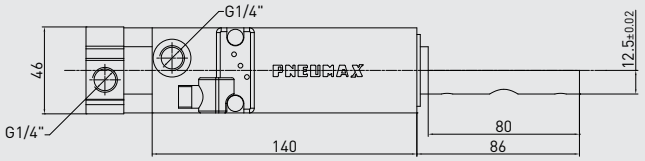

ROD TERMINATION 3

FUNCTIONAL CHARTS
SIZE 63 mm

Load position A

horizontal mounting position of the retractable locating pin/load centre on the rod

Load position B

horizontal mounting position of the retractable locating pin/load centre at 100 mm from the rod axis

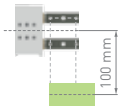

Load position C

vertical mounting position of the retractable locating pin/load centre at 100 mm from the rod axis

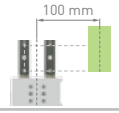

Please get in touch with our technical representatives for any application which exceeds the above values, to find the appropriate solution for your application.

Max deflection

Stroke	Load (kg)	Load position A deviation (mm)	Load position B deviation (mm)	Load position C deviation (mm)
60 mm	0.5	0.003	0.009	0
	1	0.007	0.026	0.001
	1.5	0.013	0.043	0.007
	2	0.017	0.063	0.009
	2.5	0.022	0.085	0.018
	3	0.026	0.109	0.023
	3.5	0.031	0.129	0.033
	4	0.036	0.148	0.042

Functional data (at 5 bar / 72.5 psi)

Thrust force	1,350 N
Pull force	1,550 N
Max bending moment	4 N m / 2.95 lb·ft
Max distance from the load centre to the rod	200 mm

Cycle time for max stroke

< 0.8 s NO FLOW VALVE REQUIRED

Air consumption

Air consumption for complete cycle

REV. 00 - 31/03/2015

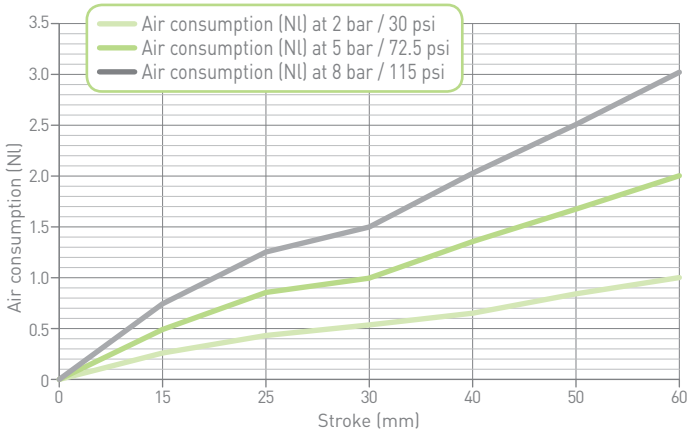

Subject to change without notice

J-SERIES	Pneumatic gripper clamps
JK-SERIES	High compensation pneumatic gripper clamps

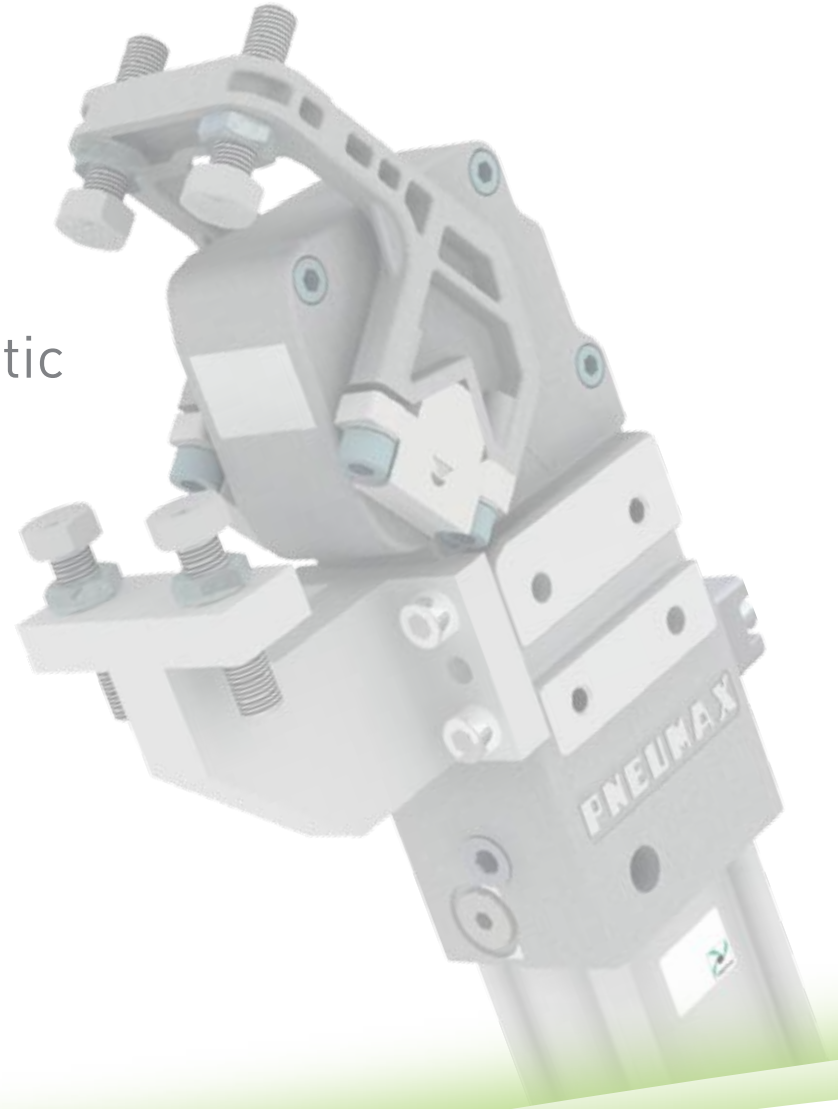

Compact gripper clamps with toggle-joint mechanism, to secure the workpiece clamping in case of air loss: the jaws remain locked in closed position. Mainly used **to hold the workpiece on edges or through holes – from above or below – and to transfer parts**.

Easy field adjustment of the opening angle, from the rear or front side of the gripper clamp,

WITH THE SHORTEST SET-UP TIME IN THE MARKET.

Complete reliability of the angle adjustment over time integrated mechanism secures the adjusted position and prevents any sliding or opening angle displacement.
A **retain mechanism** secures the **adjustment tool in its seat** and prevents the Allen wrench to fall down during the adjustment procedure.
Even without air, the clamp can be toggle-locked through the adjustment means.

WHY PNX

J-SERIES

Lightweight design, which does not compromise the stiffness and strength of the housings.

Equipped with **sealed roller bearings**, to ensure a high protection degree against contaminants
> fully encapsulated housing.

No slamming towards the opening position due to an optimal integrated cushioning system.
No flow valve required.

ORDERING STRING
J-SERIES

J	P	40	E	G	1	2	A

VERSION
J = gripper clamp

OPERATION
P = pneumatic
D = pneumatic with manual operation

1 =
2 =
3 =

SIZE
40 = Ø 40 mm

SENSOR
E = electronic sensor with M12 swivel connector - PNP
A = electronic sensor with M12 swivel connector - NPN
N = no sensor
B = electronic sensor with M8 swivel connector - PNP

PORTS
G = GAS
D = dual GAS ports on rear end cap

ARM MOVEMENT
1 = upper jaw

CLAMP ARM TYPE
2 = 2 pairs of knurled tips

ARM MATERIAL
A = aluminum
S = steel

Subject to change without notice

JP40E

Gripper clamp

Size 40 mm

WEIGHT

kg 1.9

* DIMENSIONAL TOLERANCE FOR DOWEL HOLES: ±0.02
DIMENSIONAL TOLERANCE FOR THREADED HOLES: ±0.1

REV. 00 - 31/03/2015

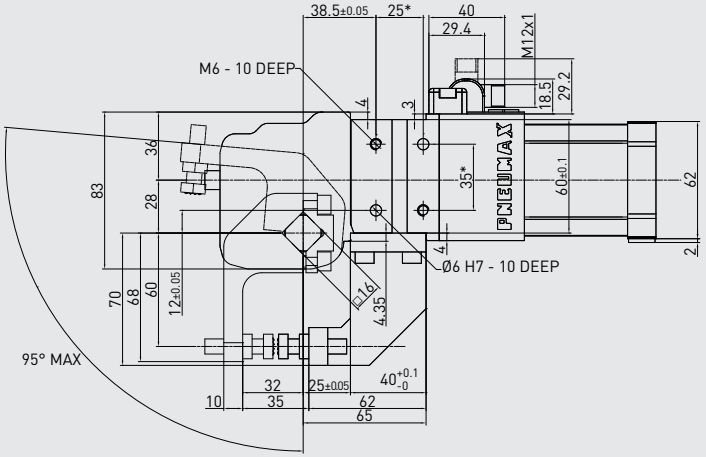

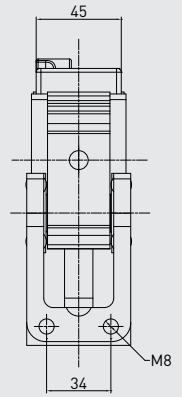

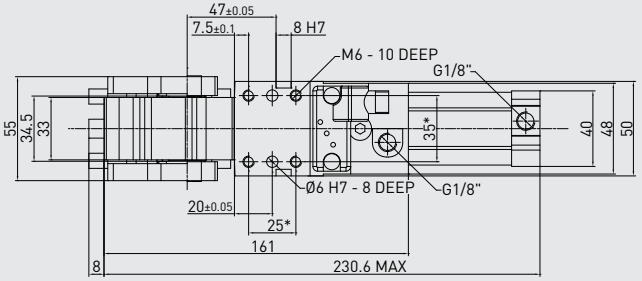

Technical features

Manual release button to open the linkage when air pressure is removed during setup. Pneumatic **ports on both sides** of the cylinder.	
Operating features	
Operating pressure	from 2 to 8 bar / from 30 to 115 psi
Lubrication	all the devices are lubricated for life at the factory. Inline air lubrication isn't required

Subject to change without notice

* DIMENSIONAL TOLERANCE FOR DOWEL HOLES: ±0.02
DIMENSIONAL TOLERANCE FOR THREADED HOLES: ±0.1

REV. 00 - 17/06/2015

WEIGHT

kg 2.2

D1 handle included

JD_40E

Gripper clamp

Size 40 mm

With manual operation

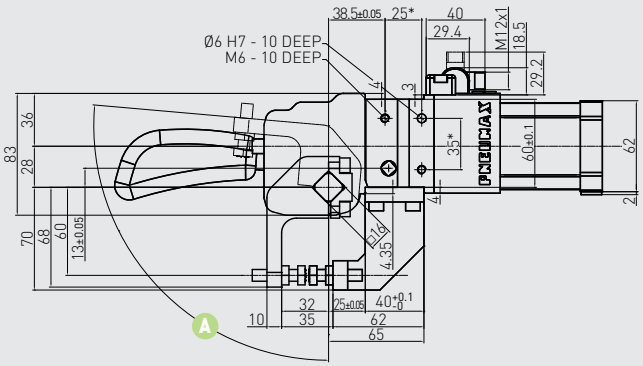

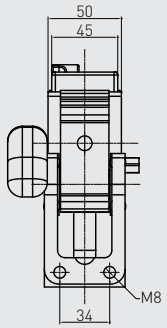

Manual operation

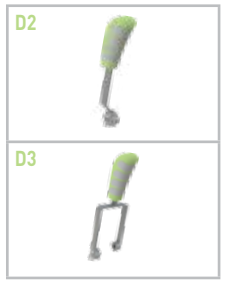

D1 VERSION

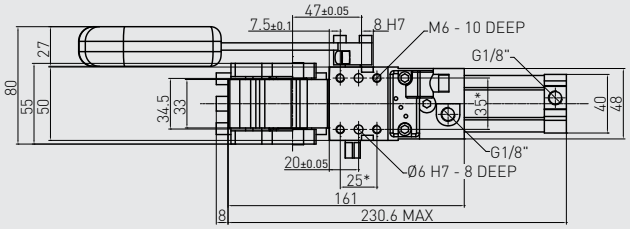

D2 VERSION

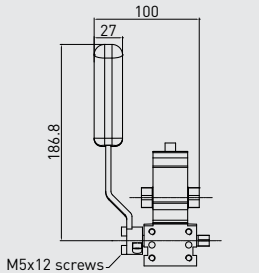

D3 VERSION

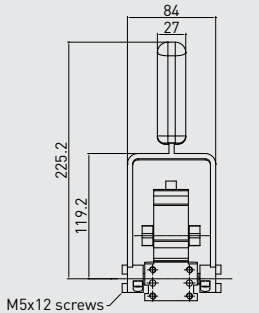

Handle swivel angle

Arm opening angle	Handle swivel angle A
0°	4.12°
15°	22.65°
30°	38.2°
45°	58.4°
60°	83.6°
75°	107.6°
90°	123.6°
105°	132.75°
120°	137.7°
135°	140°

Subject to change without notice

FUNCTIONAL CHARTS
SIZE 40 mm

Cycle time for max opening angle	< 0.8 s NO FLOW VALVE REQUIRED

Clamping moment (at 5 bar / 72.5 psi)	130 N m / 95.88 lb·ft
Holding moment	380 N m / 280.27 lb·ft

The above data are meant for correct working conditions of the clamp – with the same performance level during its life time.

For applications which exceed the above data, please contact our sales representatives.

Air consumption

Air consumption for complete cycle (opening and closing) REV. 00 - 17/06/2015

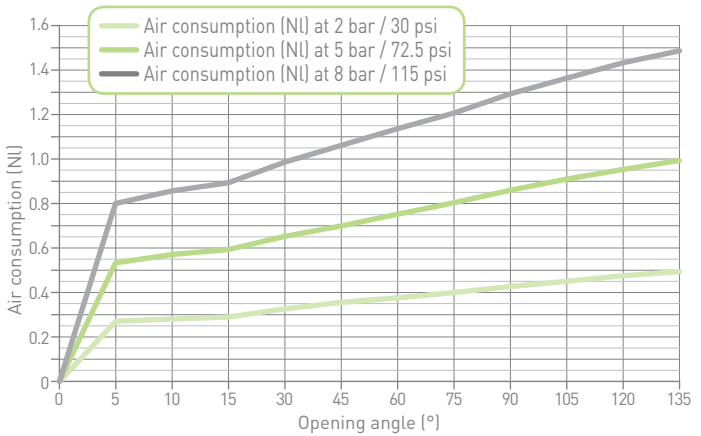

Subject to change without notice

JK- SERIES

The JK gripper clamps' series has the same features of the **J series PLUS** is able **to compensate different metal sheet thicknesses or tolerances on die casts**, which are being more often used in the production lines.

No maintenance neither external adjustment to the clamp is required to get the compensating function.

SAFE SOLUTION

The linkage is irreversible (toggle linkage) and will remain locked in case of air loss

MAINTENANCE FRIENDLY

Maintenance adjustment shimming is not required!

ORDERING STRING
JK-SERIES

JK	P	40	E	G	1	2	A

VERSION

JK = gripper clamp-workpiece thickness compensation

OPERATION

P = pneumatic
D = pneumatic with manual operation

1 =
2 =
3 =

SIZE

40 = Ø 40 mm

SENSOR

E = electronic sensor with M12 swivel connector - PNP
A = electronic sensor with M12 swivel connector - NPN
N = no sensor
B = electronic sensor with M8 swivel connector - PNP

PORTS

G = GAS
D = dual GAS ports on rear end cap

ARM MOVEMENT

1 = upper jaw

CLAMP ARM TYPE

2 = 2 pairs of knurled tips

ARM MATERIAL

A = aluminum

Subject to change without notice

* DIMENSIONAL TOLERANCE FOR DOWEL HOLES: ±0.02
DIMENSIONAL TOLERANCE FOR THREADED HOLES: ±0.1

REV. 00 - 31/03/2015

WEIGHT

kg 1.7

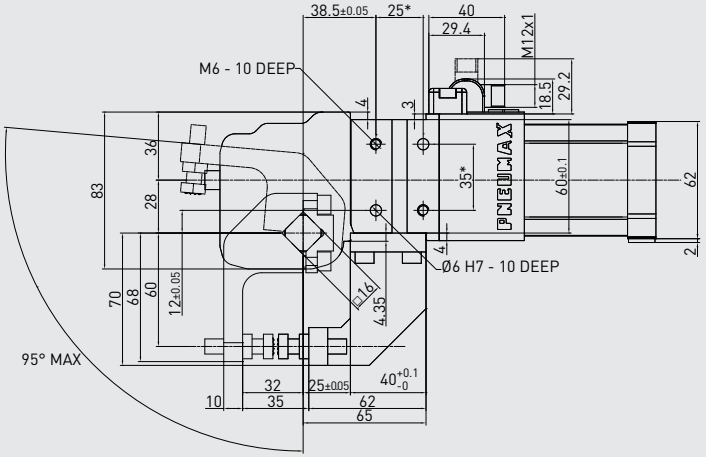

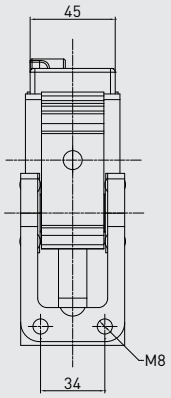

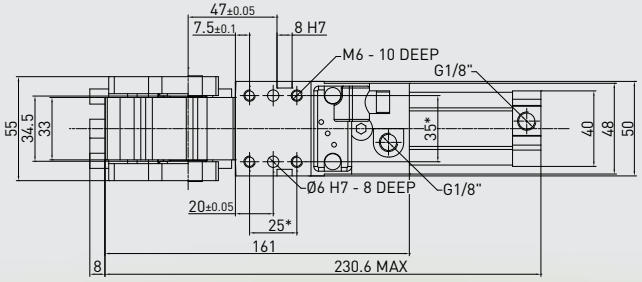

JKP40E

Gripper clamp-workpiece thickness compensation

Size 40 mm

Technical features

Manual release button to open the linkage when air pressure is removed during setup. Pneumatic **ports on both sides** of the cylinder.	
Operating features	
Operating pressure	from 2 to 8 bar / from 30 to 115 psi
Lubrication	all the devices are lubricated for life at the factory. Inline air lubrication isn't required

Subject to change without notice

JKD_40E

Gripper clamp-workpiece thickness compensation

Size 40 mm

With manual operation

WEIGHT

kg 2.2

D1 handle included

* DIMENSIONAL TOLERANCE FOR DOWEL HOLES: ±0.02
DIMENSIONAL TOLERANCE FOR THREADED HOLES: ±0.1

REV. 00 - 17/06/2015

Manual operation

D2

D3

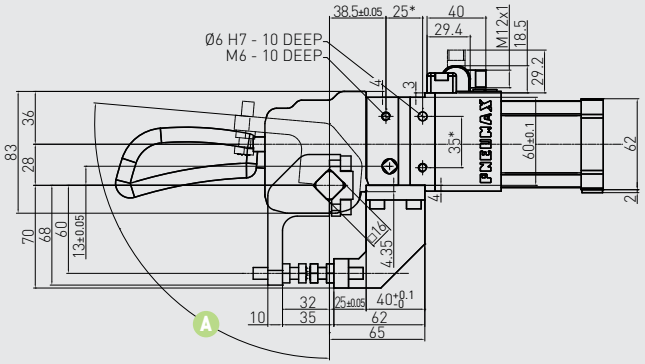

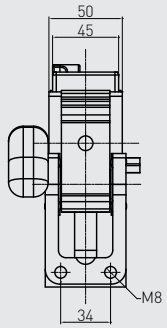

Handle swivel angle

Arm opening angle	Handle swivel angle (A)
0°	4.12°
15°	22.65°
30°	38.2°
45°	58.4°
60°	83.6°
75°	107.6°
90°	123.6°
105°	132.75°
120°	137.7°
135°	140°

D1 VERSION

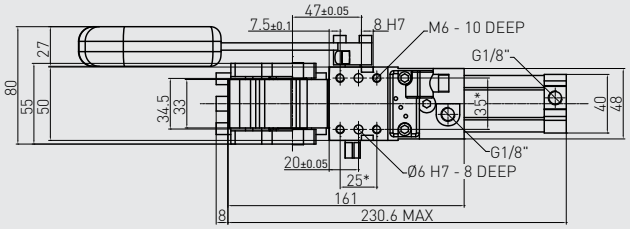

D2 VERSION

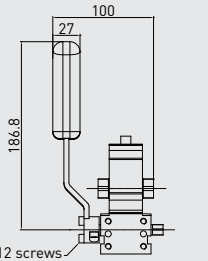

M5x12 screws
Tightening torque: 5 N m / 3.68 lb·ft

D3 VERSION

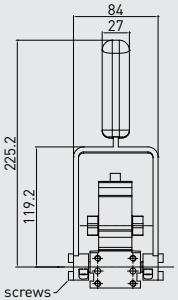

M5x12 screws
Tightening torque: 5 N m / 3.68 lb·ft

Subject to change without notice

FUNCTIONAL CHARTS
SIZE 40 mm

Cycle time for max opening angle	< 0.8 s NO FLOW VALVE REQUIRED

Clamping moment (at 5 bar / 72.5 psi)	130 N m / 95.88 lb·ft
Holding moment	380 N m / 280.27 lb·ft

The above data are meant for correct working conditions of the clamp – with the same performance level during its life time.

For applications which exceed the above data, please contact our sales representatives.

Air consumption

Air consumption for complete cycle (opening and closing) REV. 00 - 17/06/2015

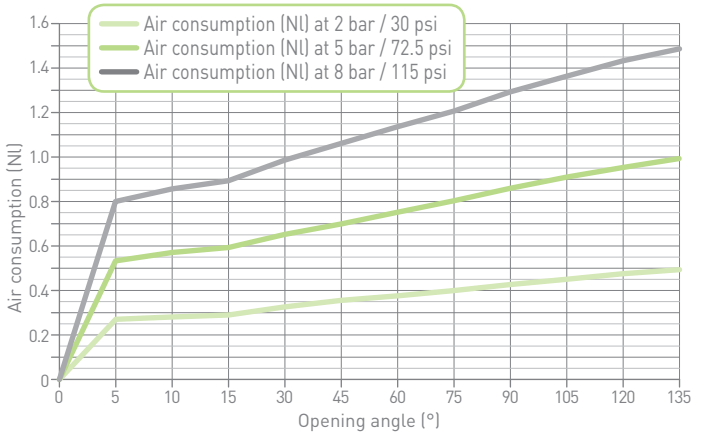

Subject to change without notice

P-SERIES Pivot units

WHY PNX

PIVOT UNITS

Robust and reliable pivot units to **accurately position and/or rotate** tooling or parts to work condition.
The P series can be mounted by its rear or front mount and can be used as a **DUMP** device. By mounting the pivot units by their lateral mounts, they can be used to **ROTATE parts, tooling and clamps' assemblies**.

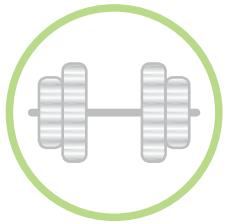

Drive shaft connections are all equipped with robust **conical roller bearings** for a high load capacity and side load acceptance.

DUMP

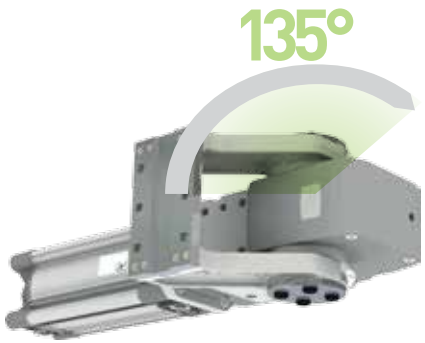

ROTATE

All enclosed mechanism

- to ensure a high protection degree against contaminants and years of service life **without maintenance**
- to minimize downtime associated with contamination

WHY PNX

PIVOT UNITS

- ✔ **Pneumatic cushioning of both end positions**: fixed orifices and integrated cushioning eliminate the need for flow controls and provides for smooth operation in the closing and opening cycles.
- ✔ No external limit stop required for optimal clearance
- ✔ **Max swivel angle: 135°**
- ✔ Easy set-up and quick installation time: the orientation of the ports can be easily achieved by untightening the tie rods
- ✔ Remains locked even after loss of air pressure
- ✔ Front, rear and side mounting surfaces
- ✔ Four table mounting positions available
- ✔ 1 sensor for all sizes and opening angle with stepless adjustable connector
- ✔ Extra light products

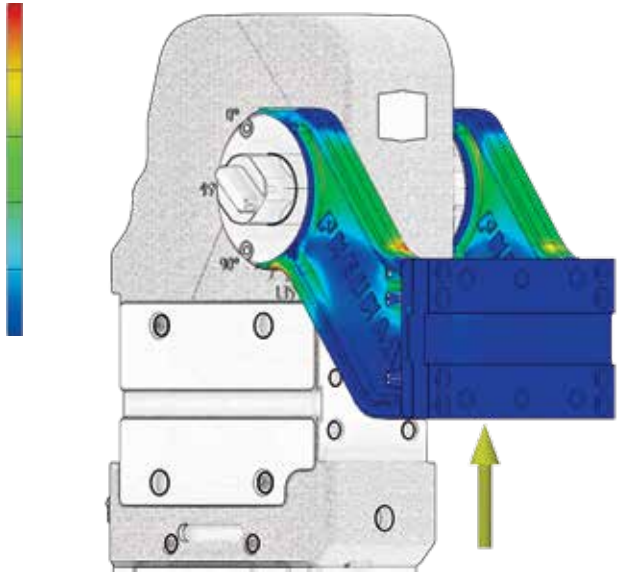

ORDERING STRING P-SERIES

P	80	E	1	G	1	N	45

VERSION
P = pivot unit

SIZE
80 = Ø 80 mm
100 = Ø 100 mm
125 = Ø 125 mm

SENSOR
E = electronic sensor with M12 swivel connector - PNP
A = electronic sensor with M12 swivel connector - NPN
N = no sensor
B = sensor for brake detection and opening angle

SUPPLY PORTS POSITION
1 = on the left side from the sensor
2 = on the front side
3 = on the right side from the sensor
4 = on the sensor's side

PORTS
G = GAS
N = NPT

TABLE MOUNT
1 =
2 =
3 =
4 =

BRAKE SYSTEM
B = brake
N = no brake

OPENING ANGLE
45°
60°
90°
120°
135°

Any intermediate opening angle is available upon request

Please see the charts for table position as well as for max. opening angle

Subject to change without notice

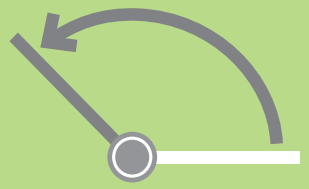

WEIGHT

kg 10.7

135° version

P80

Pivot unit

Size 80 mm

* DIMENSIONAL TOLERANCE FOR DOWEL HOLES: ±0.02
DIMENSIONAL TOLERANCE FOR THREADED HOLES: ±0.1

REV. 00 - 15/05/2015

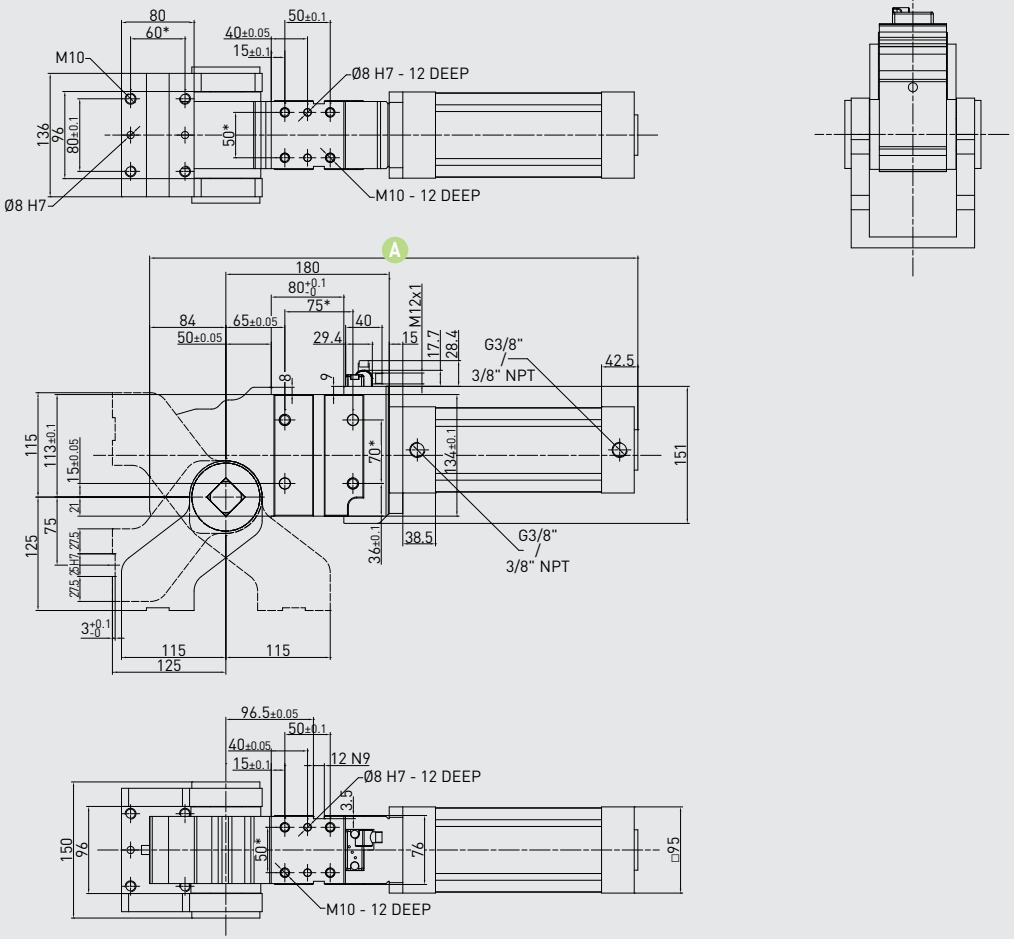

Technical features

Manual release button to open the linkage when air pressure is removed during setup.	
Operating features	
Operating pressure	from 2 to 8 bar / from 30 to 115 psi
Lubrication	all the devices are lubricated for life at the factory. Inline air lubrication isn't required

Overall length

Opening angle	Overall length (mm) A
45°	475.4
60°	487.8
90°	513.5
135°	546

Subject to change without notice

FUNCTIONAL CHARTS
SIZE 80 mm

Admissible load moment	70 N m / 51.62 lb·ft
Holding moment	2,500 N m / 1,843.90 lb·ft

Max opening angle for table positions

	MAX OP. ANGLE POS. 1	MAX OP. ANGLE POS. 2	MAX OP. ANGLE POS. 3	MAX OP. ANGLE POS. 4
135°	✔	✘	✔	✘
120°	✔	✘	✔	✘
115°	✔	✔	✔	✘
90°	✔	✔	✔	✘
60°	✔	✔	✔	✔
45°	✔	✔	✔	✔

Any intermediate opening angle is available upon request

Air consumption

Air consumption for complete cycle (opening and closing) REV. 00 - 15/05/2015

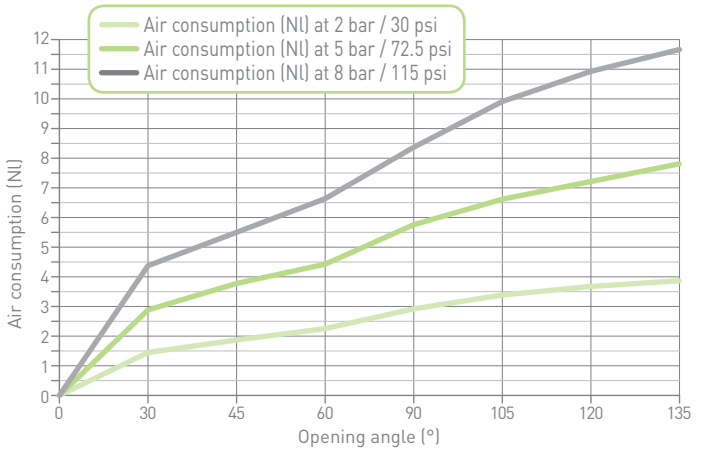

The designer of the application is required to fill in the Power Pivot application verification sheet and submit to our technical department for verification of the correct sizing of the unit.

Calculation tool available upon demand

Subject to change without notice

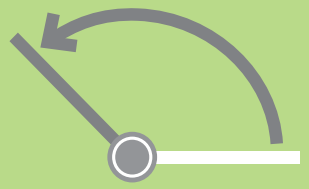

WEIGHT

kg
12.1
135° version

P100

Pivot unit

Size 100 mm

* DIMENSIONAL TOLERANCE FOR DOWEL HOLES: ±0.02
DIMENSIONAL TOLERANCE FOR THREADED HOLES: ±0.1

REV. 00 - 15/05/2015

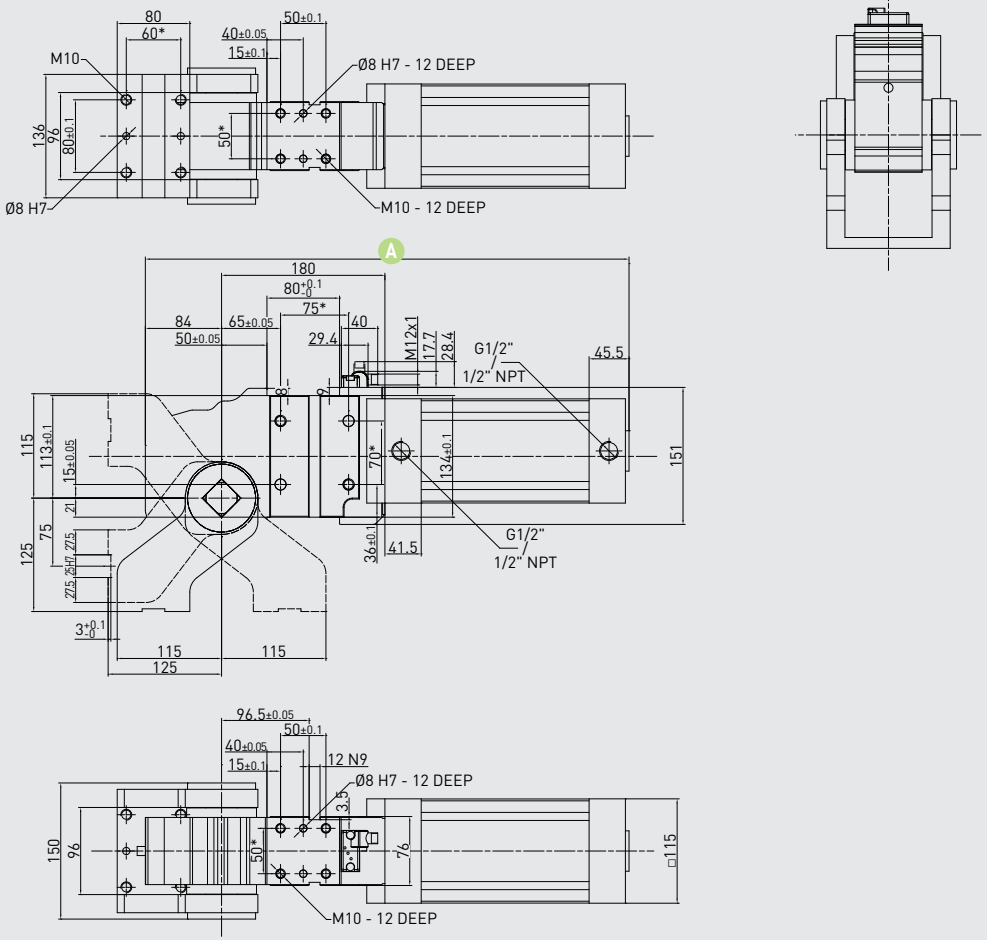

Technical features

Manual release button to open the linkage when air pressure is removed during setup.	
Operating features	
Operating pressure	from 2 to 8 bar / from 30 to 115 psi
Lubrication	all the devices are lubricated for life at the factory. Inline air lubrication isn't required

Overall length

Opening angle	Overall length (mm) A
45°	470.4
60°	482.8
90°	508.5
135°	541

Subject to change without notice

FUNCTIONAL CHARTS
SIZE 100 mm

Admissible load moment	130 N m / 95.88 lb·ft
Holding moment	2,500 N m / 1,843.90 lb·ft

Max opening angle for table positions

	MAX OP. ANGLE POS. 1	MAX OP. ANGLE POS. 2	MAX OP. ANGLE POS. 3	MAX OP. ANGLE POS. 4
135°	✔	✘	✔	✘
120°	✔	✘	✔	✘
115°	✔	✔	✔	✘
90°	✔	✔	✔	✘
60°	✔	✔	✔	✔
45°	✔	✔	✔	✔

Any intermediate opening angle is available upon request

Air consumption

Air consumption for complete cycle (opening and closing) REV. 00 - 15/05/2015

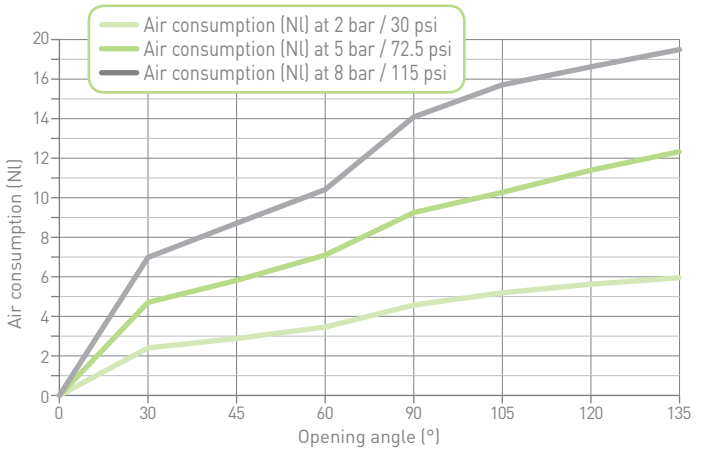

The designer of the application is required to fill in the Power Pivot application verification sheet and submit to our technical department for verification of the correct sizing of the unit.

Calculation tool available upon demand

Subject to change without notice

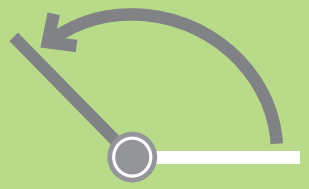

WEIGHT

kg
15.8
135° version

P125

Pivot unit

Size 125 mm

* DIMENSIONAL TOLERANCE FOR DOWEL HOLES: ±0.02
DIMENSIONAL TOLERANCE FOR THREADED HOLES: ±0.1

REV. 00 - 15/05/2015

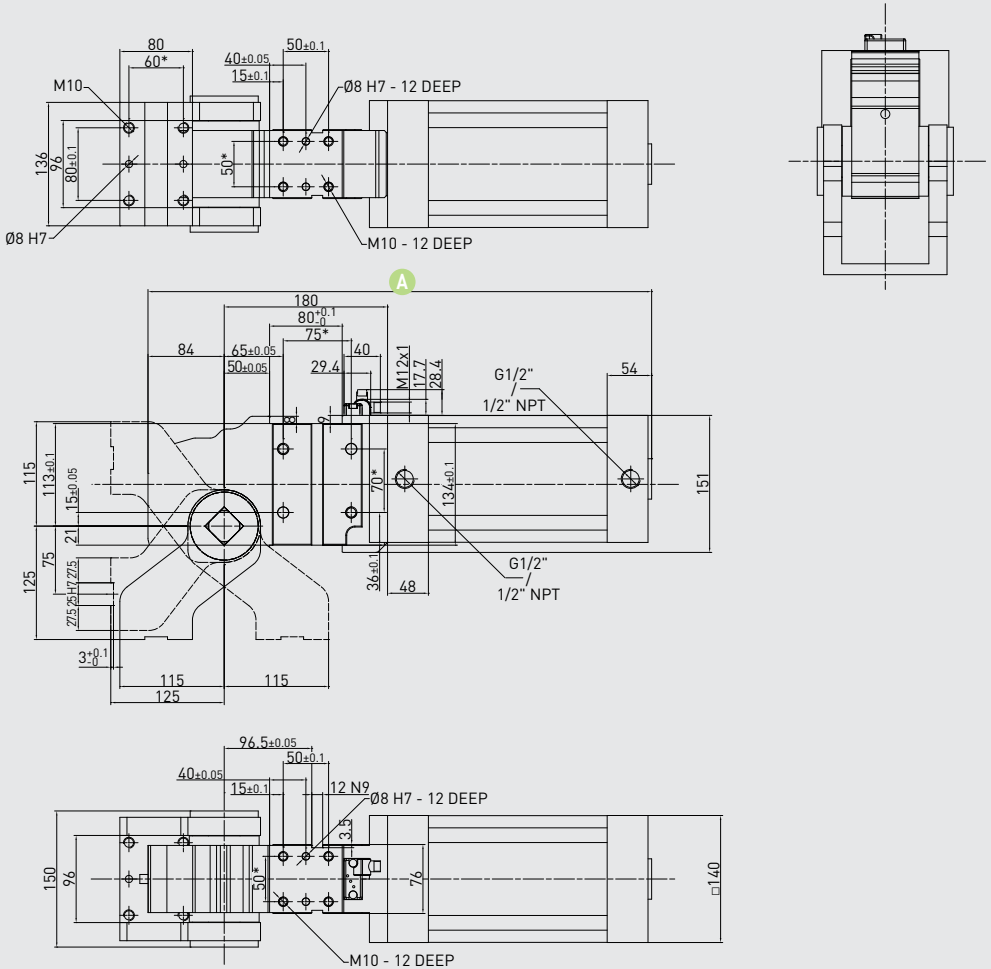

Technical features

Manual release button to open the linkage when air pressure is removed during setup.	
Operating features	
Operating pressure	from 2 to 8 bar / from 30 to 115 psi
Lubrication	all the devices are lubricated for life at the factory. Inline air lubrication isn't required

Overall length

Opening angle	Overall length (mm) A
45°	494.4
60°	506.8
90°	532.5
135°	565

Subject to change without notice

FUNCTIONAL CHARTS
SIZE 125 mm

Admissible load moment	180 N m / 132.76 lb·ft
Holding moment	2,500 N m / 1,843.90 lb·ft

Max opening angle for table positions

	MAX OP. ANGLE POS. 1	MAX OP. ANGLE POS. 2	MAX OP. ANGLE POS. 3	MAX OP. ANGLE POS. 4
135°	✔	✘	✔	✘
120°	✔	✘	✔	✘
115°	✔	✔	✔	✘
90°	✔	✔	✔	✘
60°	✔	✔	✔	✔
45°	✔	✔	✔	✔

Any intermediate opening angle is available upon request

Air consumption

Air consumption for complete cycle (opening and closing) REV. 00 - 15/05/2015

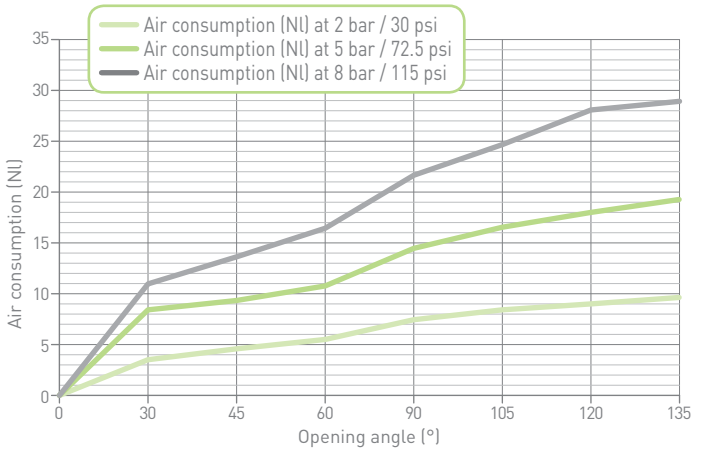

The designer of the application is required to fill in the Power Pivot application verification sheet and submit to our technical department for verification of the correct sizing of the unit.

Calculation tool available upon demand

Subject to change without notice

ACCESSORIES

Shims

Spacers

Sensors

Sensor cables

Auto-retaining devices

Special design products

Ecolight cylinders with rodscrapers

Special arm types

ORDERING STRING SHIMS AND SPACERS

SH A 16 477 05

PRODUCT
SH = shims

MOUNTS
A = for clamping arms
M = front, rear or side mounts of clamps or pin packages

SIZE
16 = for clamping arms with 16 mm shaft
1922 = for clamping arms with 19 OR 22 mm shaft
30 = for clamping arms with 30 mm shaft
30x32 = mounting dimensions

HOLE PATTERN
477 = 4 holes, 2 Ø 7 screw holes and 2 Ø 7 dowel holes
499 = 4 holes, 2 Ø 7 screw holes and 2 Ø 9 dowel holes
399 = 3 holes, 2 Ø 9 screw holes and 1 Ø 9 dowel holes

THICKNESS
01 = 0.1 mm
02 = 0.2 mm
05 = 0.5 mm
15 = 1.5 mm
20 = 2 mm
50 = 5 mm

SP A 16 477 50

PRODUCT
SP = spacers

MOUNTS
A = for clamping arms
M = front, rear or side mounts of clamps or pin packages

SIZE
16 = for clamping arms with 16 mm shaft
1922 = for clamping arms with 19 OR 22 mm shaft
30 = for clamping arms with 30 mm shaft
30x32 = mounting dimensions

HOLE PATTERN
477 = 4 holes, 2 Ø 7 screw holes and 2 Ø 7 dowel holes
499 = 4 holes, 2 Ø 9 screw holes and 2 Ø 9 dowel holes
399 = 6 holes, 3 Ø 9 screw holes and 3 Ø 9 dowel holes

THICKNESS
50 = 5 mm

Subject to change without notice

SHIMS

* DIMENSIONAL TOLERANCE FOR DOWEL HOLES: ±0.02
DIMENSIONAL TOLERANCE FOR THREADED HOLES: ±0.1

REV. 00 - 01/10/2015

Shims

	A	B	C	D	E	F	G	TYPE
SHA1647701	7	7	44	16	20	7	0.1	4 SLOTS
SHA1647702	7	7	44	16	20	7	0.2	4 SLOTS
SHA1647705	7	7	44	16	20	7	0.5	4 SLOTS
SHA1647710	7	7	44	16	20	7	1	4 SLOTS
SHA1647720	7	7	44	16	20	7	2	4 SLOTS
SHA1647750	7	7	44	16	20	7	5	4 SLOTS
SHA192249901	9	9	60	20	30	7.5	0.1	4 SLOTS
SHA192249902	9	9	60	20	30	7.5	0.2	4 SLOTS
SHA192249905	9	9	60	20	30	7.5	0.5	4 SLOTS
SHA192249910	9	9	60	20	30	7.5	1	4 SLOTS
SHA192249920	9	9	60	20	30	7.5	2	4 SLOTS
SHA192249950	9	9	60	20	30	7.5	5	4 SLOTS
SHM30X3239901	9	9	50	50	32	9	5	3 SLOTS
SHM30X3239902	9	9	50	50	32	9	5	3 SLOTS
SHM30X3239905	9	9	50	50	32	9	5	3 SLOTS
SHM30X3239910	9	9	50	50	32	9	5	3 SLOTS
SHM30X3239920	9	9	50	50	32	9	5	3 SLOTS
SHM30X3239950	9	9	50	50	32	9	5	3 SLOTS
SPA1647750	7	7	44	16	20	7	5	4 HOLES
SPA192249950	9	9	60	20	30	7.5	5	4 HOLES
SPA3047750	9	9	60	25	30	7.5	5	4 HOLES
SPM192239950	9	9	50	50	32	9	5	6 HOLES

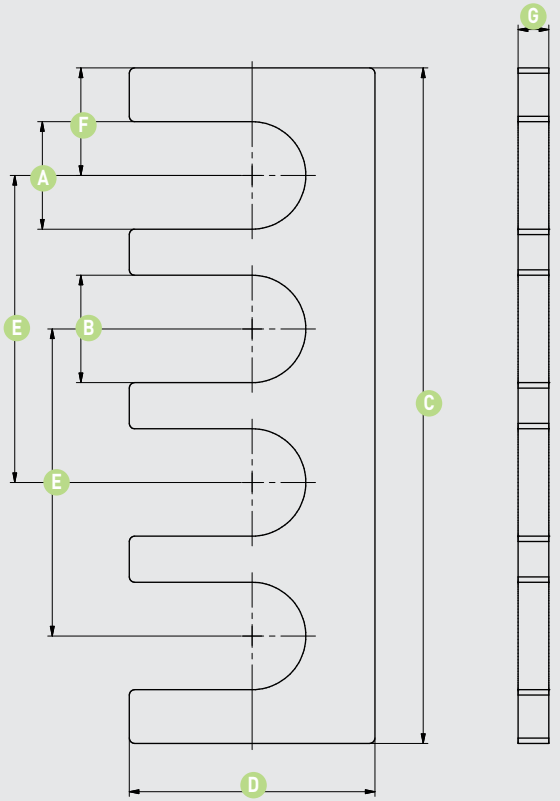

Subject to change
without notice

* DIMENSIONAL TOLERANCE FOR DOWEL HOLES: ±0.02
DIMENSIONAL TOLERANCE FOR THREADED HOLES: ±0.1

REV. 00 - 01/10/2015

SPACERS

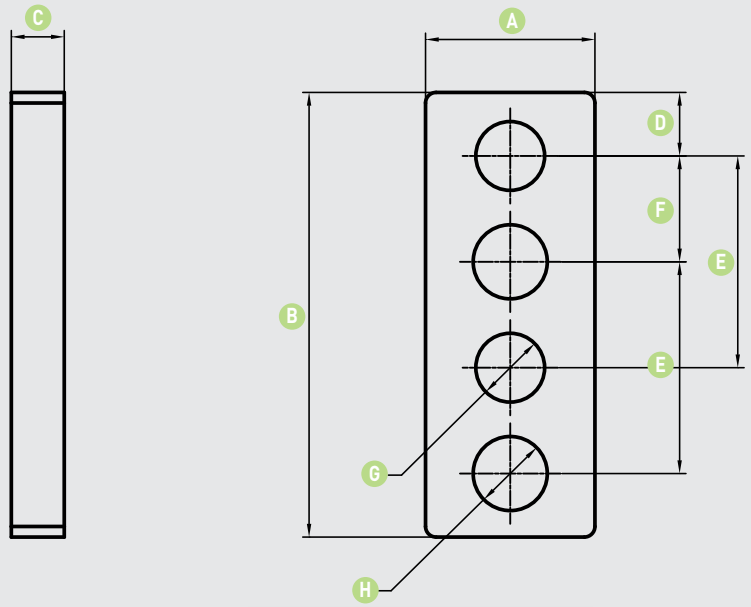

Spacers

	A	B	C	D	E	F	G	H
SPA1647650	16	42	5	6	20	10	6.5	7
SPA192247650	20	60	5	7.5	30	15	9	9
SPA3047650	25	60	5	7.5	30	15	9	9

Subject to change
without notice

1 FOR ALL

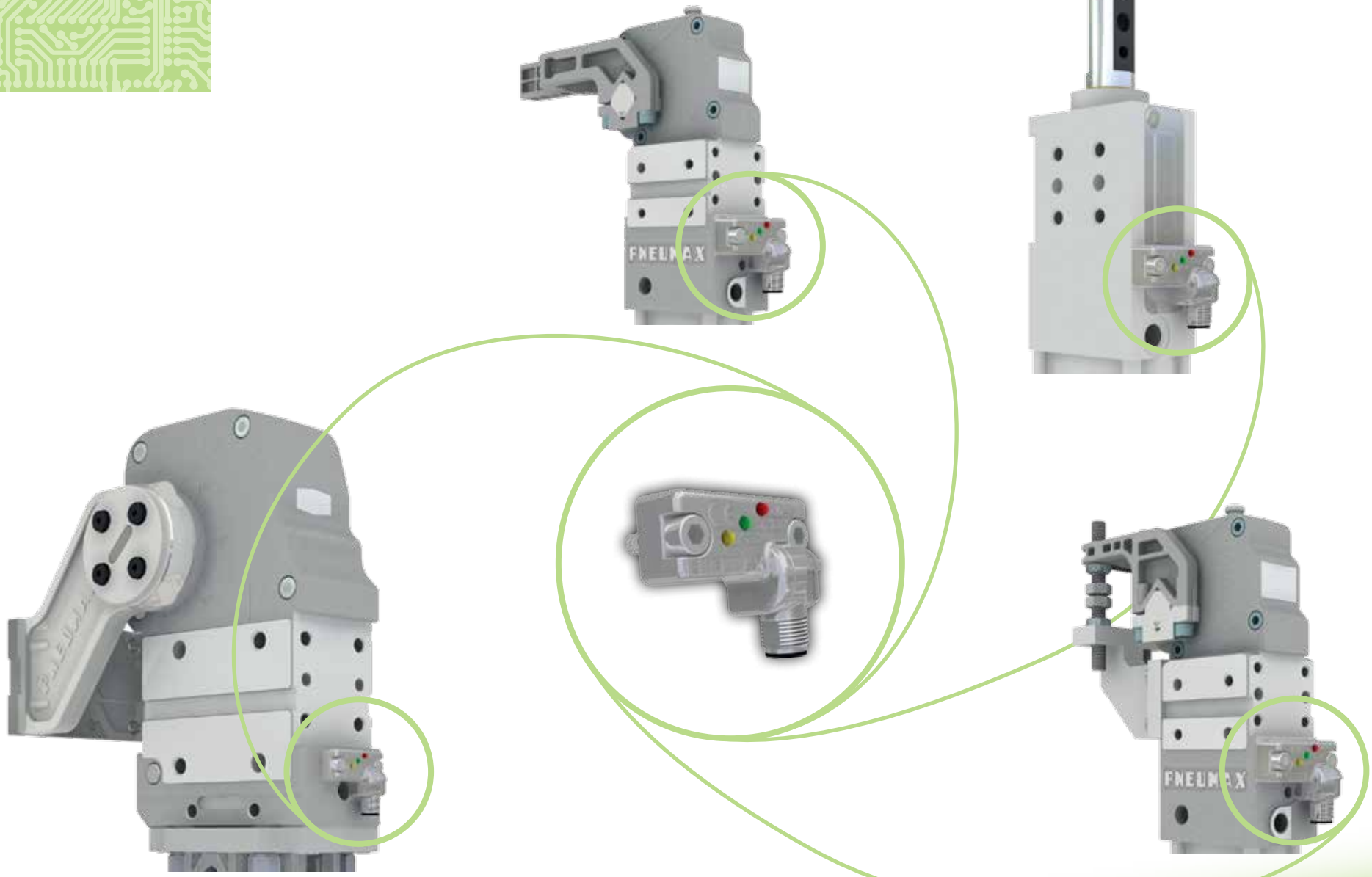

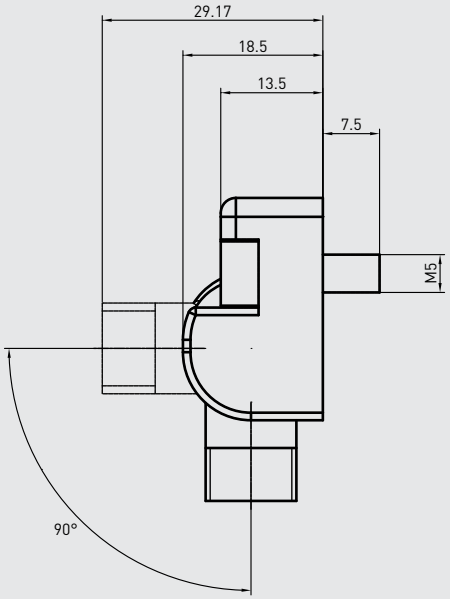

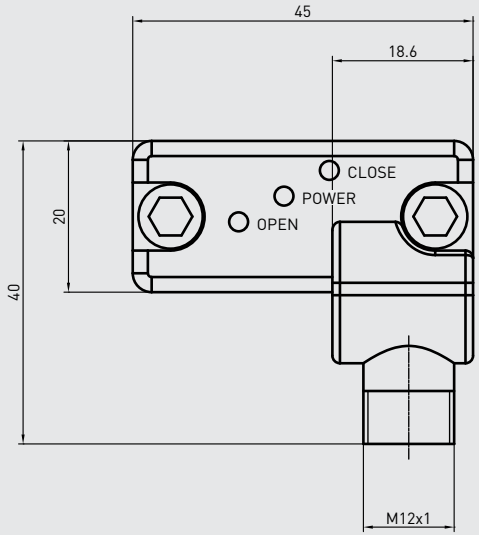

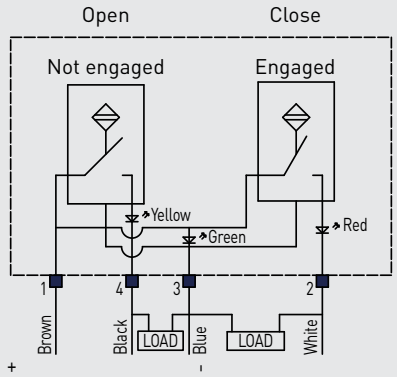

Semplified diagram (PNP)

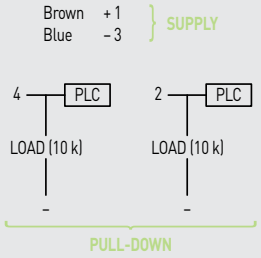

ES001

Electronic sensor with M12 swivel connector - PNP

Technical features

Operating voltage	10-30 VDC
Voltage drop	≤ 2 V
Load current	≤ 100 mA
Current consumption	≤ 30 mA
Short-circuit protection	protected
Protection rating	IP68
Operating temperature	–0 °C +50 °C
Storage temperature	–25 °C +60 °C
Electromagnetic compatibility	EN 60947-5-2:2007 + A1:2012
Power supply indication	green LED
Open position indication	yellow LED
Closed position indication	red LED
Digital output type	PNP

Subject to change without notice

ES002

Electronic sensor
with M12 swivel
connector - NPN

Technical features

Operating voltage	10-30 VDC
Voltage drop	≤ 2 V
Load current	≤ 100 mA
Current consumption	≤ 30 mA
Short-circuit protection	protected
Protection rating	IP68
Operating temperature	–0 °C +50 °C
Storage temperature	–25 °C +60 °C
Electromagnetic compatibility	EN 60947-5-2:2007 + A1:2012
Power supply indication	green LED
Open position indication	yellow LED
Closed position indication	red LED
Digital output type	NPN

Subject to change
without notice

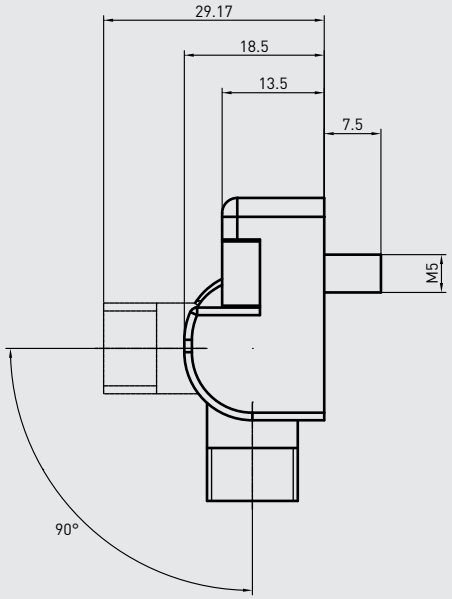

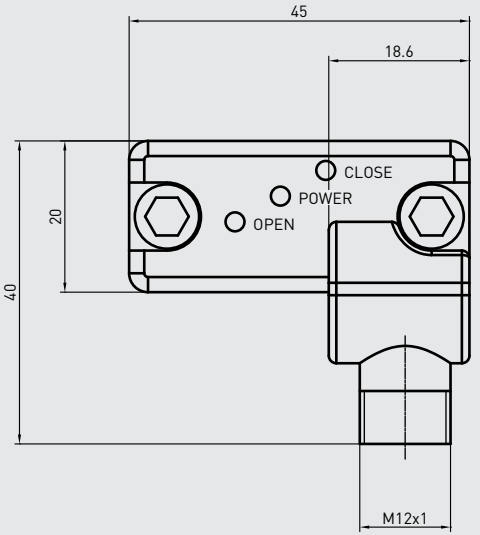

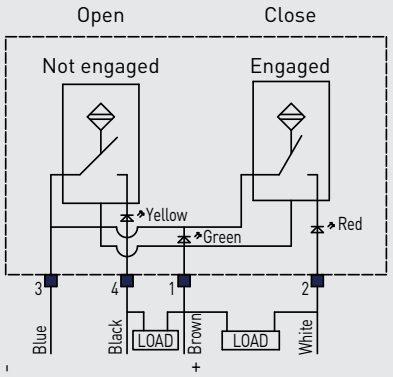

Semplified diagram (NPN)

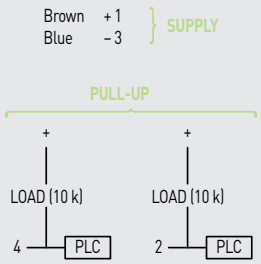

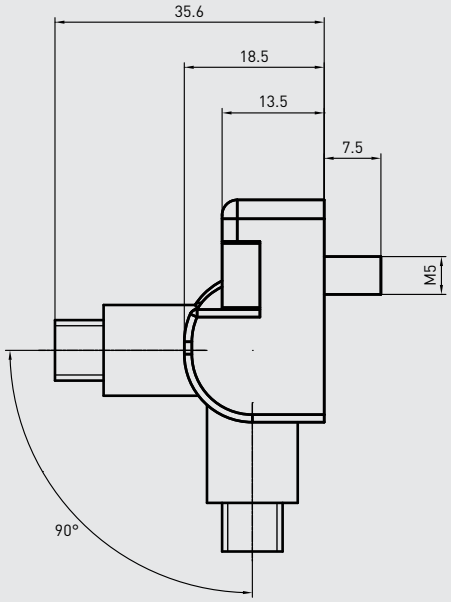

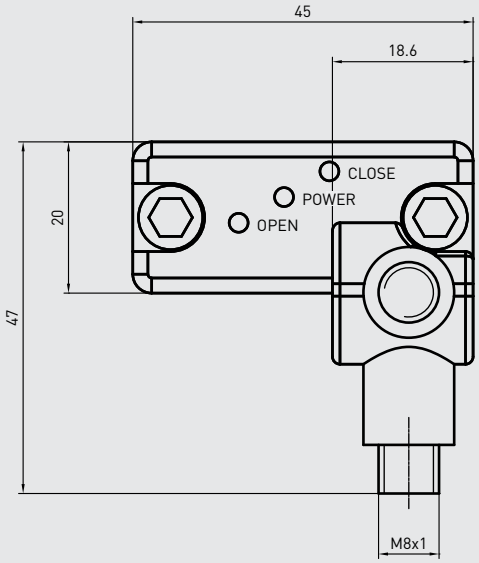

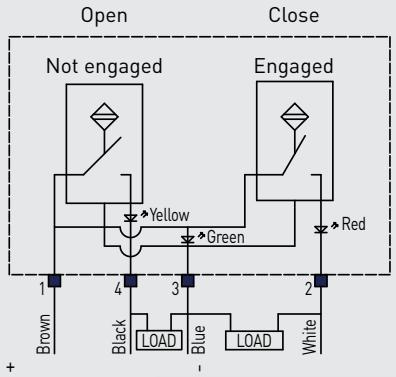

Semplified diagram (PNP)

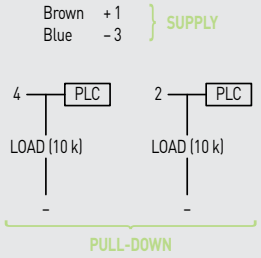

ES003

Electronic sensor with M8 swivel connector - PNP

Technical features

Operating voltage	10-30 VDC
Voltage drop	≤ 2 V
Load current	≤ 100 mA
Current consumption	≤ 30 mA
Short-circuit protection	protected
Protection rating	IP68
Operating temperature	–0 °C +50 °C
Storage temperature	–25 °C +60 °C
Electromagnetic compatibility	EN 60947-5-2:2007 + A1:2012
Power supply indication	green LED
Open position indication	yellow LED
Closed position indication	red LED
Digital output type	PNP

Subject to change without notice

CNOMO

ES004

Electronic sensor with M12 swivel connector - PNP

Technical features

Operating voltage	10-30 VDC
Voltage drop	≤ 2 V
Load current	≤ 100 mA
Current consumption	≤ 30 mA
Short-circuit protection	protected
Protection rating	IP68
Operating temperature	–0 °C +50 °C
Storage temperature	–25 °C +60 °C
Electromagnetic compatibility	EN 60947-5-2:2007 + A1:2012
Power supply indication	green LED
Open position indication	green LED
Closed position indication	yellow LED
Digital output type	PNP

Subject to change without notice

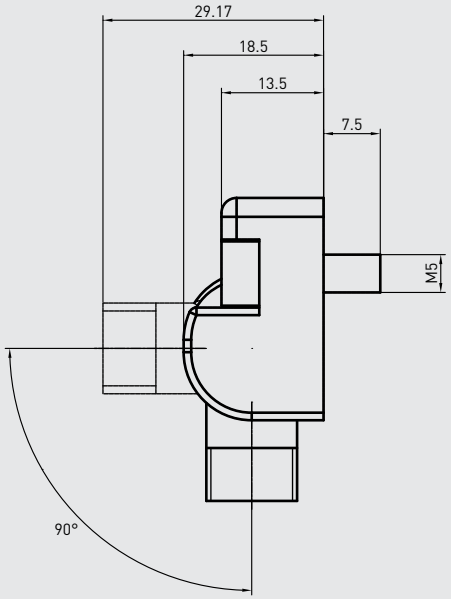

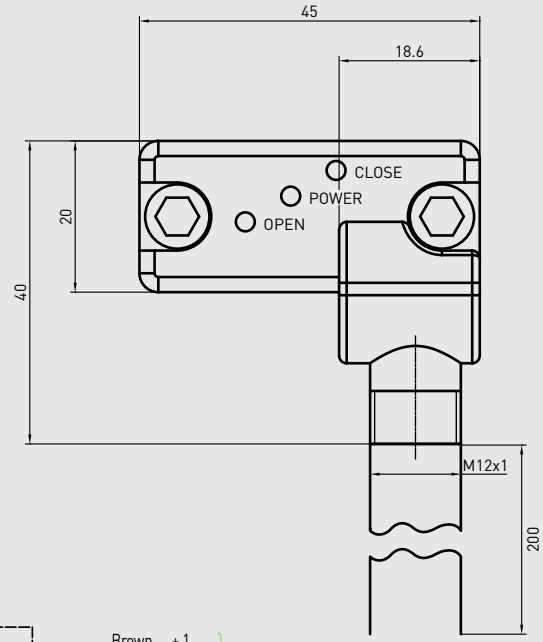

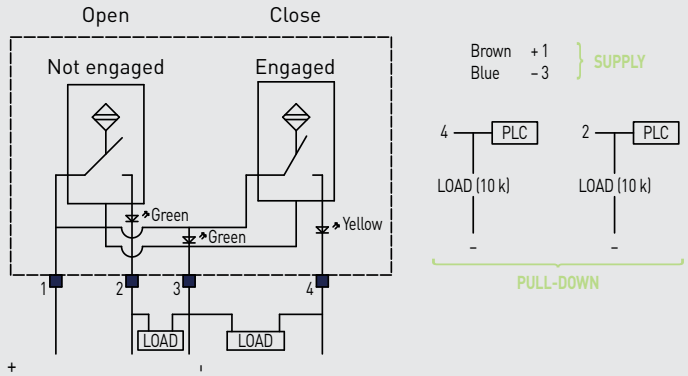

Semplified diagram (PNP)

* DIMENSIONAL TOLERANCE FOR DOWEL HOLES: ±0.02
DIMENSIONAL TOLERANCE FOR THREADED HOLES: ±0.1

REV. 00 - 03/04/2015

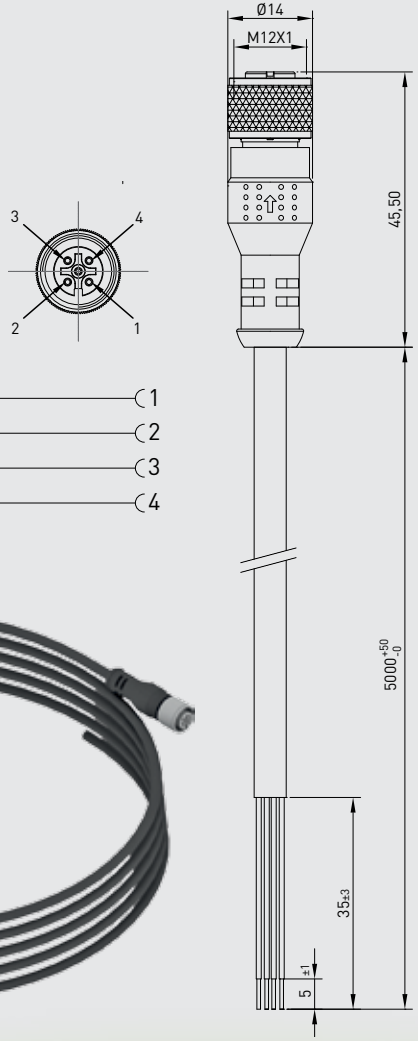

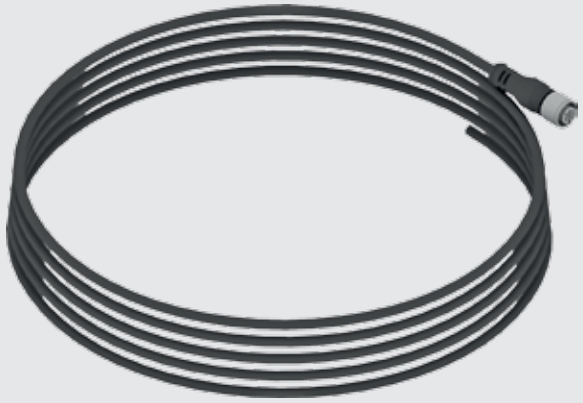

EC001-05

Technical features

Connector features	
Product type	M12 circular connector with moulded cable
Connector type	Straight 180°
Contacts type	Female 4 poles
Number of contacts connected	4
Protection class	IP69K
Rated voltage	250V AC/DC
Rated current	4 A
Cable features	
Pneumax cable code	EC001-05
Numbers of conductors	4
Conductors section	0,34 mm² (AWG22)
Cable material	PUR UL style 21576 c UL us
Coating colour	Black
Conductors insulation material	TPO
Cable length	5000 mm
Stripping	35 mm Standard
Peeling and tinning	5 mm Standard
High flex (class 6)	

Subject to change without notice

ORDERING STRING
AUTO-RETAINING DEVICE

Optional: **auto-retaining** device for opening position

An extremely light device which maintains the clamping arm in its defined opening position in case of air loss.
The AR-series has been designed for **maximum load capacity** and due to its compact dimensions, it can be used on the same side of the manual operation handle.

VERSION

AR = Auto-retaining device

SIZE

12 = Clamp's shaft 12 mm
16 = Clamp's shaft 16 mm
19 = Clamp's shaft 19 mm
22 = Clamp's shaft 22 mm
30 = Clamp's shaft 30 mm

PATENT PENDING

Subject to change without notice

* DIMENSIONAL TOLERANCE FOR DOWEL HOLES: ±0.02
DIMENSIONAL TOLERANCE FOR THREADED HOLES: ±0.1

REV. 00 - 17/02/2016

Auto-retaining device - Clamp's shaft 12 mm

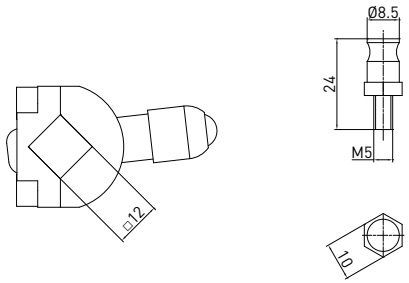

AR12

Clamp's shaft 12 mm

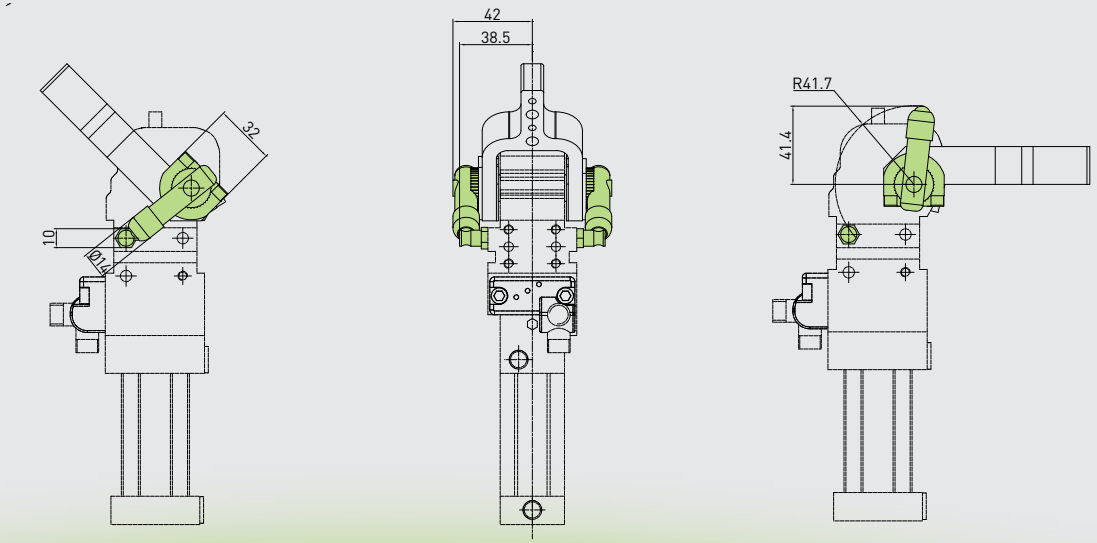

Subject to change
without notice

AR16

Clamp's shaft 16 mm

* DIMENSIONAL TOLERANCE FOR DOWEL HOLES: ±0.02
DIMENSIONAL TOLERANCE FOR THREADED HOLES: ±0.1

REV. 00 - 16/02/2016

Auto-retaining device - Clamp's shaft 16 mm

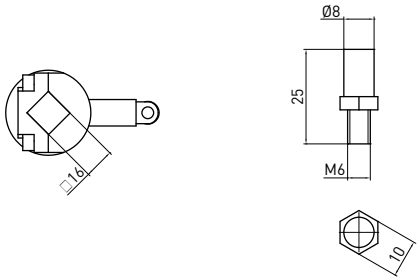

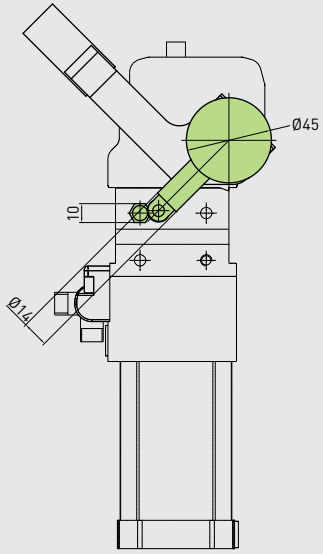

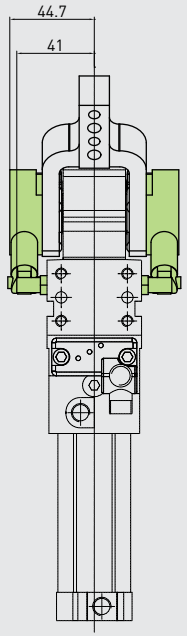

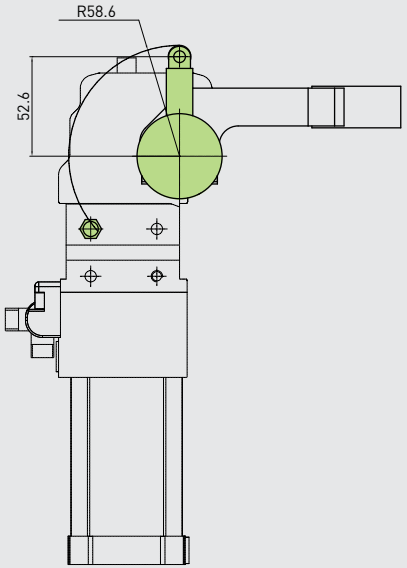

Subject to change
without notice

* DIMENSIONAL TOLERANCE FOR DOWEL HOLES: ±0.02
DIMENSIONAL TOLERANCE FOR THREADED HOLES: ±0.1

REV. 00 - 16/02/2016

Auto-retaining device - Clamp's shaft 19 mm

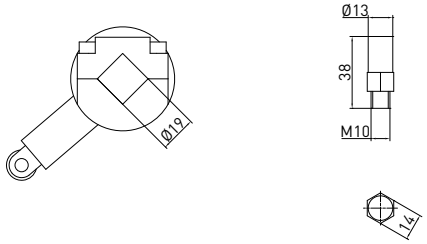

AR19

Clamp's shaft 19 mm

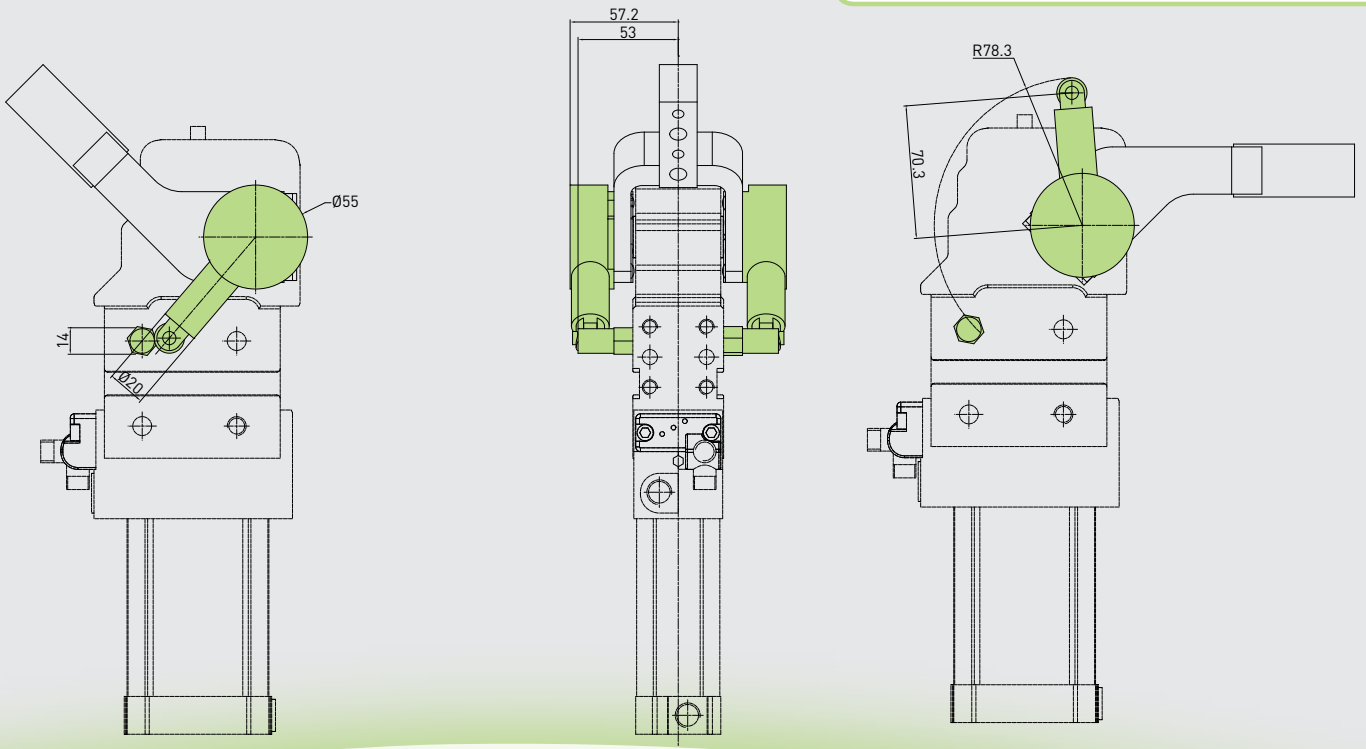

Subject to change
without notice

AR22

Clamp's shaft 22 mm

* DIMENSIONAL TOLERANCE FOR DOWEL HOLES: ±0.02
DIMENSIONAL TOLERANCE FOR THREADED HOLES: ±0.1

REV. 00 - 16/02/2016

Auto-retaining device - Clamp's shaft 22 mm

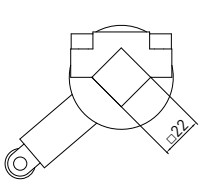

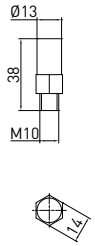

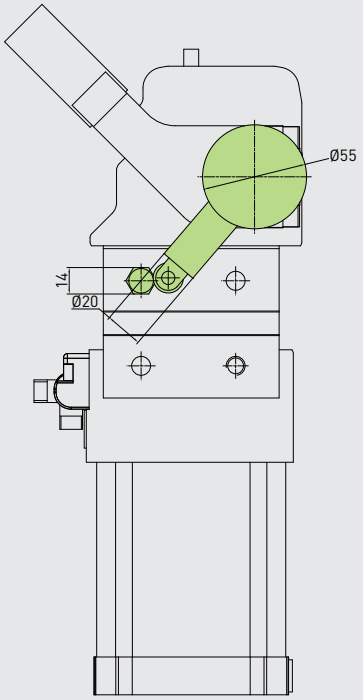

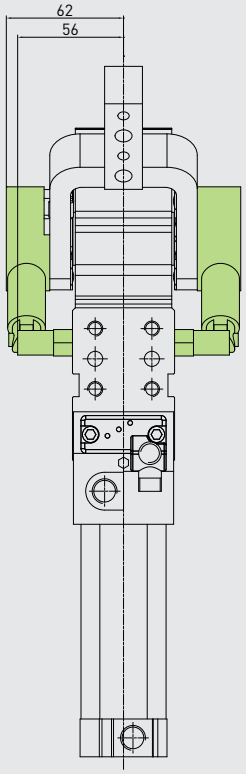

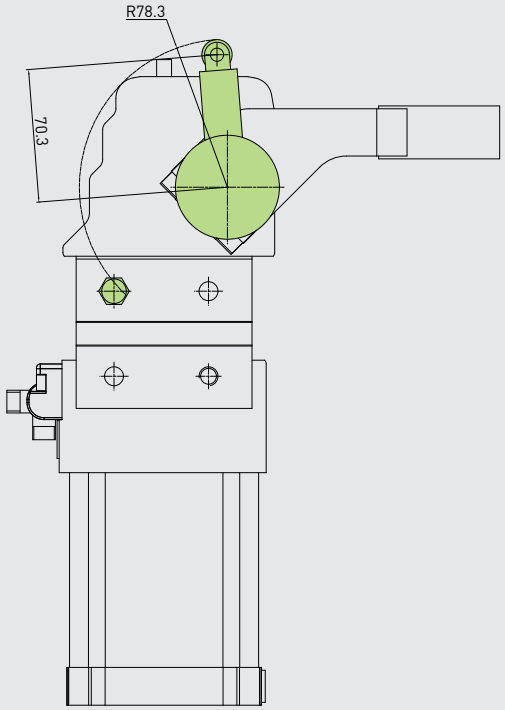

Subject to change
without notice

AUTO-RETAINING FOR PIN PACKAGES

AUTO-RETAINING System for PIN PACKAGES with manual operation.

- ✔ Suitable for sheet metal processing applications
- ✔ Endures harsh manufacturing environments

It locks the manual lever and guarantees the working position of the pin package with no air.

It can easily be assembled on the right, as well as on the left side of the unit.

Hand lever can be adjusted on the shaft for an optimal ergonomic application; it can be mounted on the right or left side.

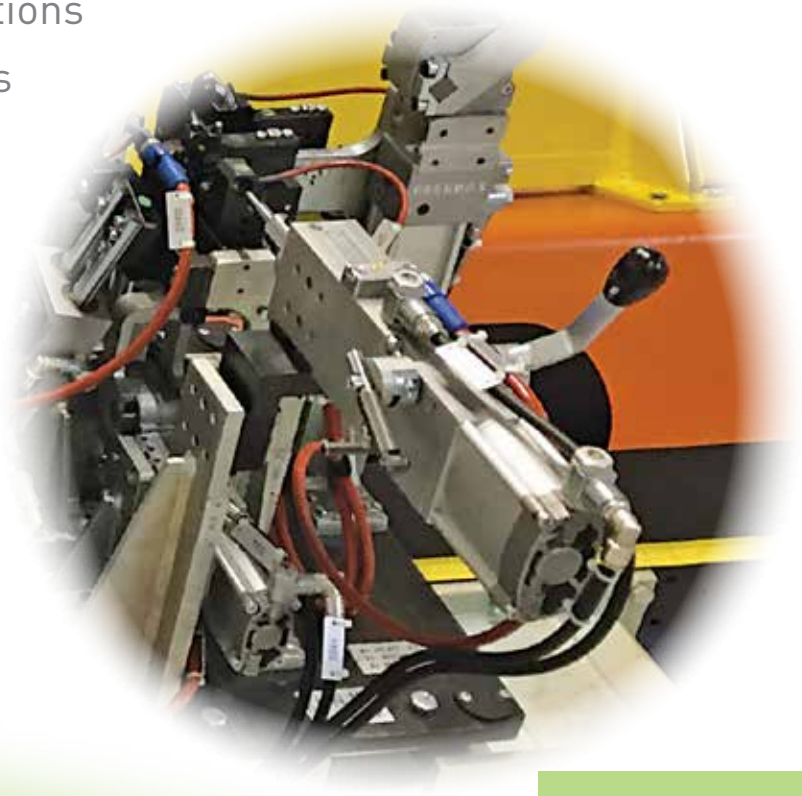

AR09RD

AUTO-RETAINING System
for PIN PACKAGES with
manual operation

* DIMENSIONAL TOLERANCE FOR DOWEL HOLES: ±0.02
DIMENSIONAL TOLERANCE FOR THREADED HOLES: ±0.1

REV. 00 - 05/03/2018

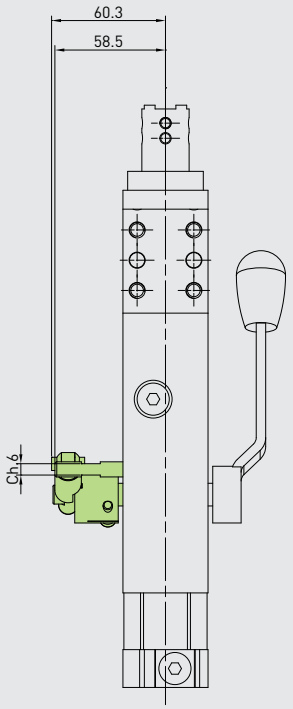

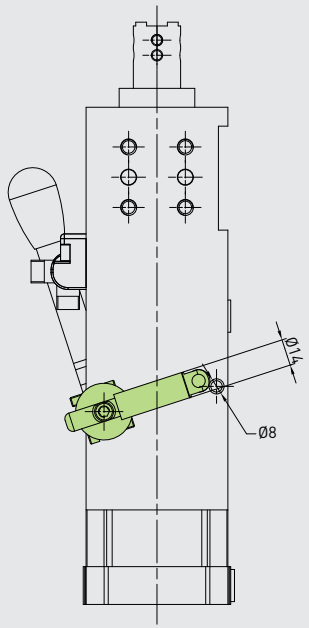

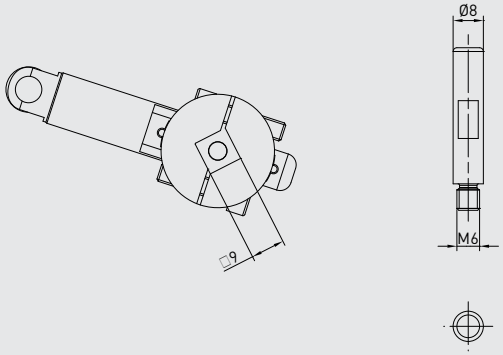

Subject to change
without notice

SPECIAL DESIGN PRODUCTS

CUSTOMIZED SPECIAL DESIGN PRODUCTS:

PNEUMAX engineering department will analyse every request for any specific application and will adapt or develop new components to meet the customer's needs. Get in touch with us!

Cooling water intake cylinder for welding guns' electrodes replacement

The capacity of the intake chamber is 0.1 l.

The cylinder can be mounted to the service panel (RIP) for automated welding.

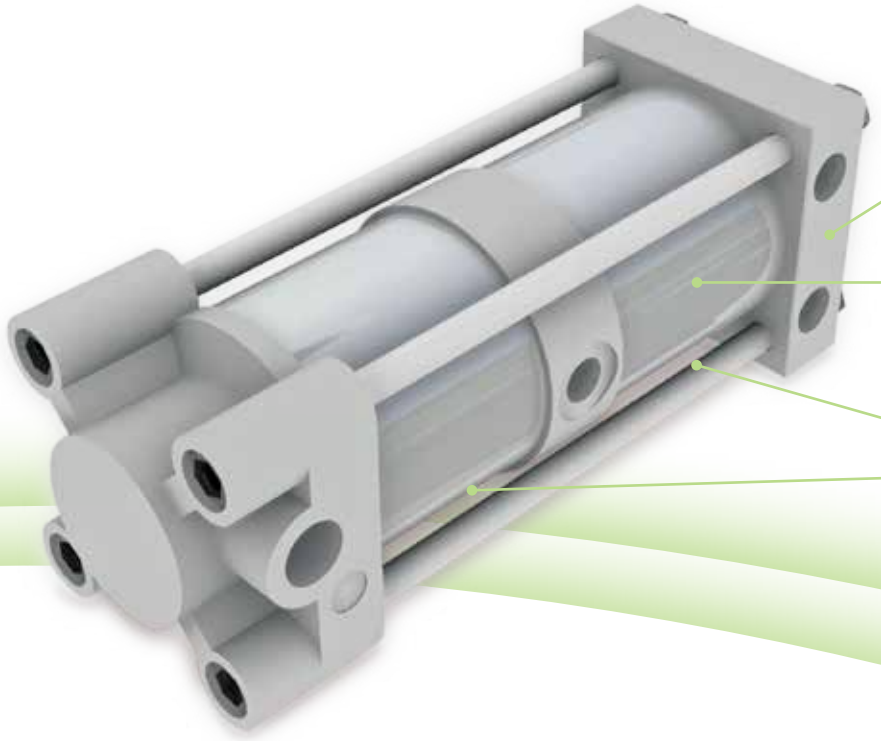

Not suitable for manual welding operations

PCY0050

Cooling water
intake cylinder

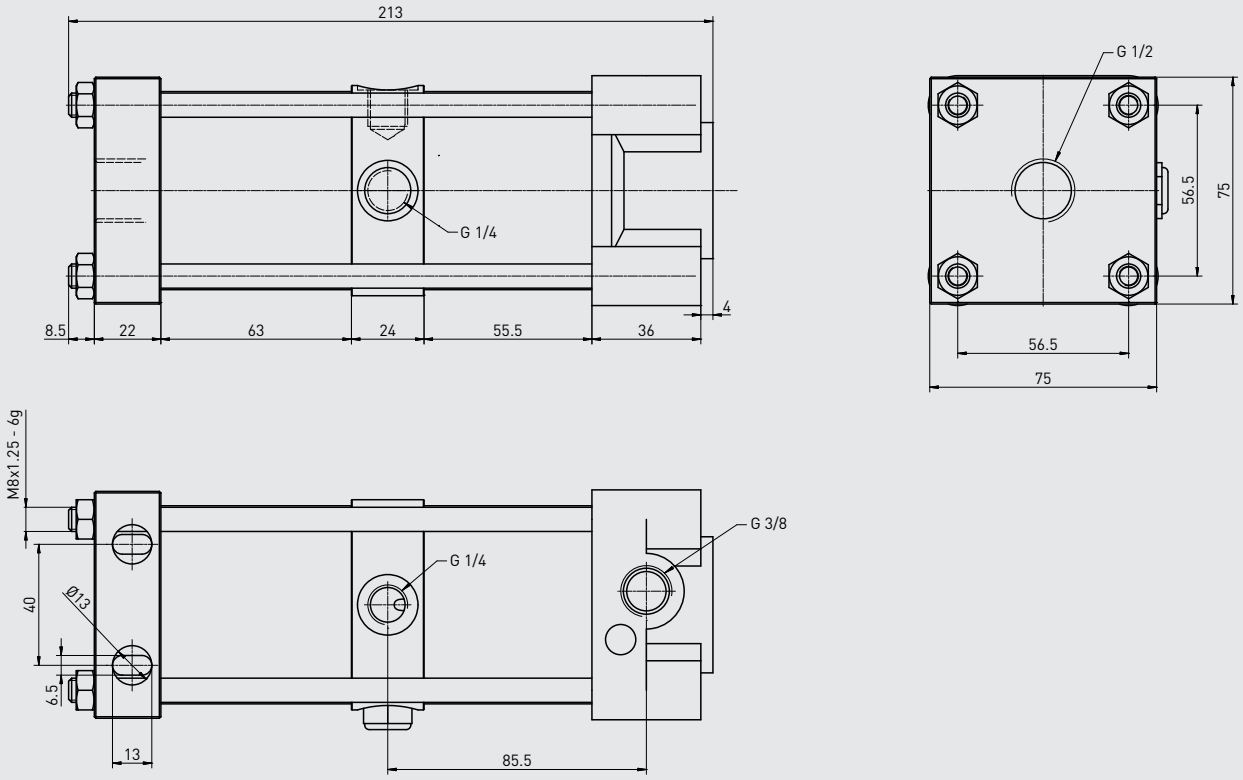

Subject to change
without notice

ECOLIGHT CYLINDERS WITH RODSCRAPERS

Ecolight cylinders according to ISO 15552 standard with integrated metal rodscraper.

Permanent protection of the piston rod against welding debris particles: the metallic wiper constantly wipes any welding deposits off the piston rod.

The seal is made of a special FKM-based elastomer with approx. 81 shore hardness.

1390 050 0400 01R

Series	Diameter	Stroke	Specification
1390	32 40 50 63 80	**From 0 to 150 mm** = every 25 mm **From 150 to 500 mm** = every 50 mm **From 500 to 1000 mm** = every 100 mm	**01R** = chromed rod; with metal rodscraper

* DIMENSIONAL TOLERANCE FOR DOWEL HOLES: ±0.02
DIMENSIONAL TOLERANCE FOR THREADED HOLES: ±0.1

REV. 00 - 03/04/2015

Ecolight cylinders

Bore		32	40	50	63	80	100	125	160	200
AM		22	24	32	32	40	40	54	72	72
B (d11)		30	35	40	45	45	55	60	65	75
BG		16	16	18	18	16	16	21	25	25
E		47	54	65	76	95	113	138	180	216
EE		G1/8"	G1/4"	G1/4"	G3/8"	G3/8"	G1/2"	G1/2"	G3/4"	G3/4"
G		29.5	33	32	36	38.5	41.5	48	49	49
KK		M10x1.25	M12x1.25	M16x1.5	M16x1.5	M20x1.5	M20x1.5	M27x2	M36x2	M36x2
KV		17	19	24	24	30	30	41	55	55
KW		6	7	8	8	9	9	12	18	18
L2		19	22	29	29	35	36	45	50	60
L3		4	4	5	5	/	/	/	/	/
L8		94	105	106	121	128	138	160	180	180
MM		12	16	20	20	25	25	32	40	40
PL		13	16	18	18	16	18	25	26	25
PM		3	4	5	4.5	2.5	6	8	11	11
RT		M6	M6	M8	M8	M10	M10	M12	M16	M16
SW		10	13	17	17	22	22	27	36	36
TG		32.5	38	46.5	56.5	72	89	110	140	175
VA		4	4	4	4	4	4	6	6	6
VB		33	41	51	51	65	71	75	70	75
VD		4	4	4	4	4	4	6	6	6
VF		12	12	16	16	20	20	25	30	30
VG		48	54	69	69	86	91	119	152	167
WH		26	30	37	37	46	51	65	80	95
Weight (g)	Stroke 0	460	650	1,030	1,360	2,180	2,890	5,700	11,200	14,900
	every 10 mm	23	32	45	49	75	81	130	195	245

Subject to change without notice

Product features

End plates	Die-casting aluminum
Rod	C43 chromed steel
Barrel	Anodised aluminum alloy
Rod-guide bushing	Spheroid bronze on steel band with P.T.F.E. coat
Seals	Standard: NBR oil resistant rubber, PUR piston rod seals (PUR seals available upon request)
Cushion adjusting screws	Brass

Technical features

Fluid	Filtered and preferably lubricated air (if lubricated the lubrication must be continuous)
Max. pressure	10 bar

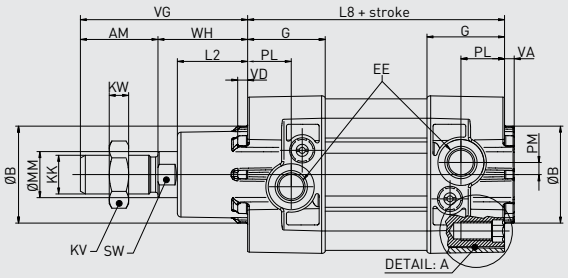

DETAIL: A
Ø32÷Ø63

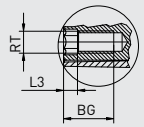

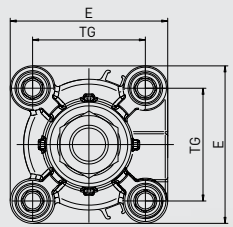

SPECIAL ARM TYPES

- Thanks to manufacturing process of profile extrusion, Pneumax responds reactively to customers' specific requirements.

- Different offsets and different heights can be obtained from the same profile, without the need of a different mold.

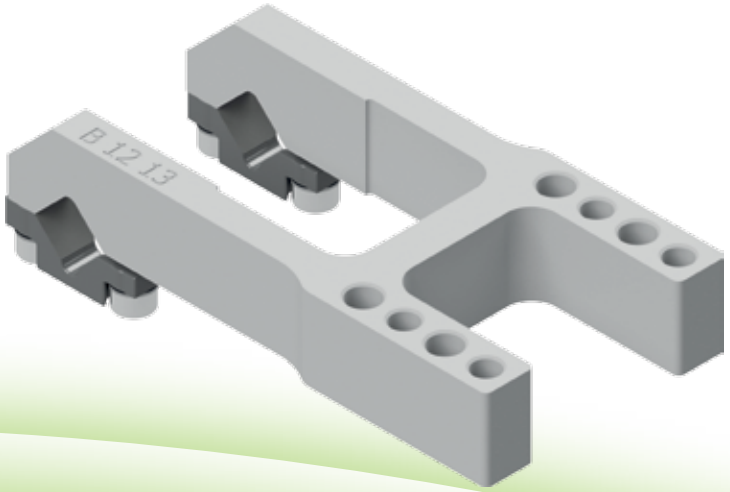

PATENTED

CLAMPING ARMS

12 mm shaft

for clamps' size 25 mm and size 32 mm

Left & right clamping surfaces

* DIMENSIONAL TOLERANCE FOR DOWEL HOLES: ±0.02
DIMENSIONAL TOLERANCE FOR THREADED HOLES: ±0.1

REV. 00 - 12/04/2017

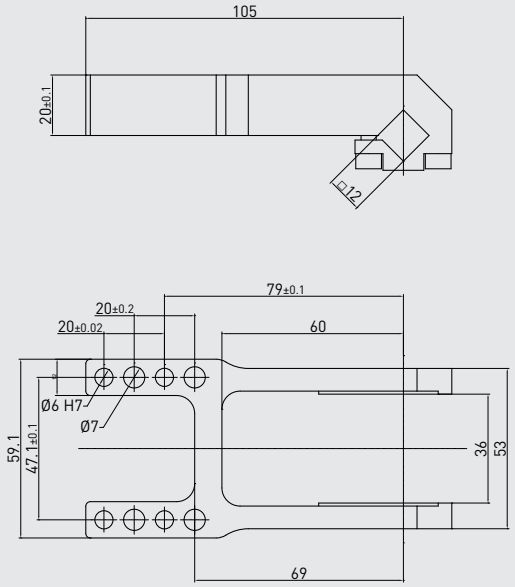

B1213
for size 25 mm and size 32 mm

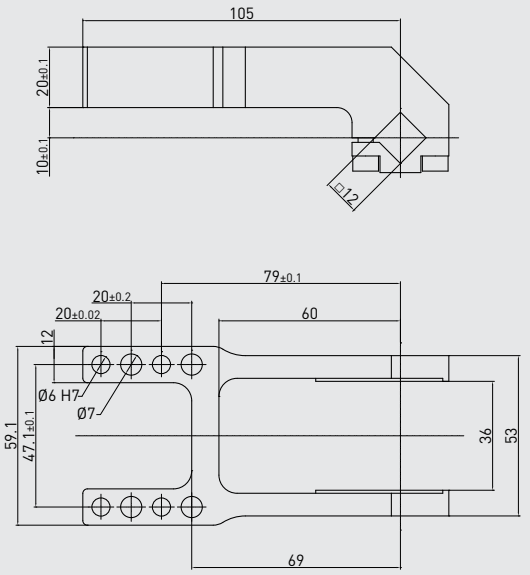

B1214
for size 25 mm and size 32 mm

12 mm shaft - 25 mm offset

PART NO.	MATERIAL	VERSION	WEIGHT (kg)	MAX OP. ANGLE POS. 1	MAX OP. ANGLE POS. 2	MAX OP. ANGLE POS. 3	MAX OP. ANGLE POS. 4
B1213	Aluminum	H	0.163	135°	115°	N/A	45°

Screws: M5x14 **Tightening torque:** 5 N m / 3.68 lb ft

12 mm shaft - 25 mm offset

PART NO.	MATERIAL	VERSION	WEIGHT (kg)	MAX OP. ANGLE POS. 1	MAX OP. ANGLE POS. 2	MAX OP. ANGLE POS. 3	MAX OP. ANGLE POS. 4
B1214	Aluminum	H	0.173	135°	115°	N/A	45°

Screws: M5x14 **Tightening torque:** 5 N m / 3.68 lb ft

Subject to change without notice

* DIMENSIONAL TOLERANCE FOR DOWEL HOLES: ±0.02
DIMENSIONAL TOLERANCE FOR THREADED HOLES: ±0.1

REV. 00 - 12/05/2017

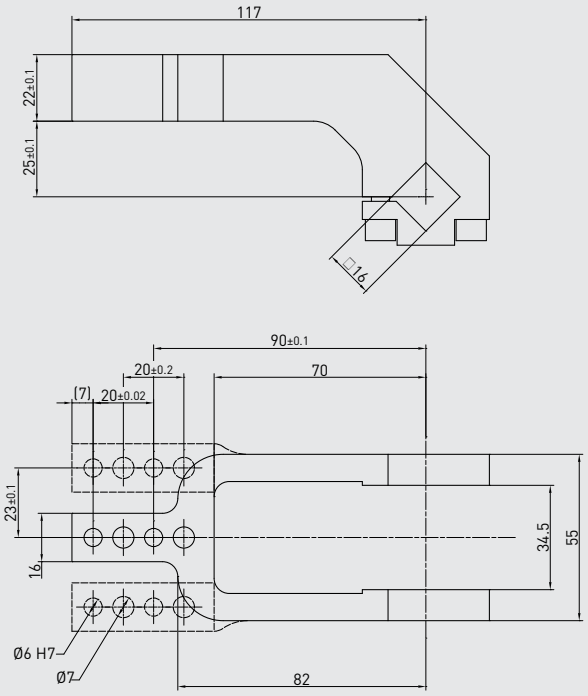

REV. 00 - 23/11/2018

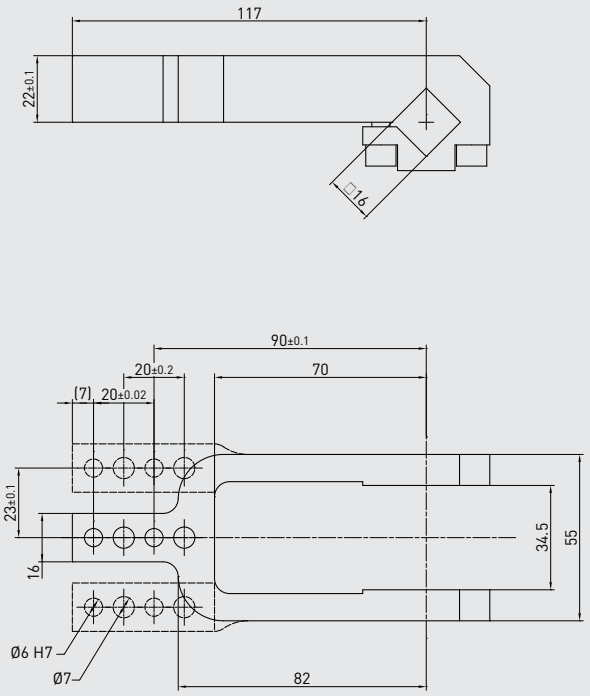

CLAMPING ARMS

16 mm shaft
for clamps' size 40 mm

16 mm shaft - 25 mm offset

PART NO.	MATERIAL	VERSION	WEIGHT (kg)	MAX OP. ANGLE POS. 1	MAX OP. ANGLE POS. 2	MAX OP. ANGLE POS. 3	MAX OP. ANGLE POS. 4
B1621	Aluminum	Central	0.25	135°	135°	N/A	45°
B1622	Aluminum	Right	0.25	135°	135°	N/A	45°
B1623	Aluminum	Left	0.25	135°	135°	N/A	45°

Screws: M6x20 **Tightening torque:** 10 N m /7.37 lb ft

16 mm shaft - 0 mm offset

PART NO.	MATERIAL	VERSION	WEIGHT (kg)	MAX OP. ANGLE POS. 1	MAX OP. ANGLE POS. 2	MAX OP. ANGLE POS. 3	MAX OP. ANGLE POS. 4
B1618	Aluminum	Central	0.25	135°	105°	135°	90°
B1619	Aluminum	Right	0.25	135°	105°	135°	90°
B1620	Aluminum	Left	0.25	135°	105°	135°	90°

Screws: M6x20 **Tightening torque:** 10 N m /7.37 lb ft

Subject to change without notice

CLAMPING ARMS

19 mm shaft

25 mm offset for clamps' size 50 mm

* DIMENSIONAL TOLERANCE FOR DOWEL HOLES: ±0.02
DIMENSIONAL TOLERANCE FOR THREADED HOLES: ±0.1

REV. 00 - 12/05/2017

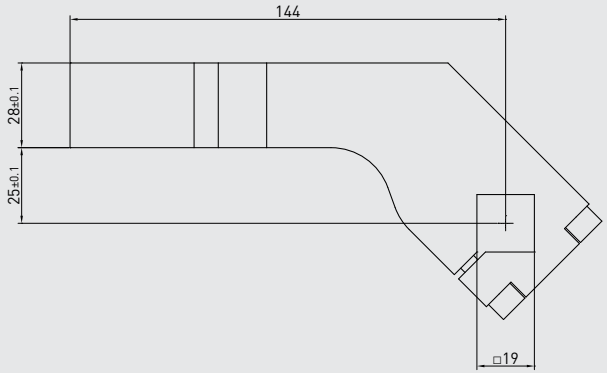

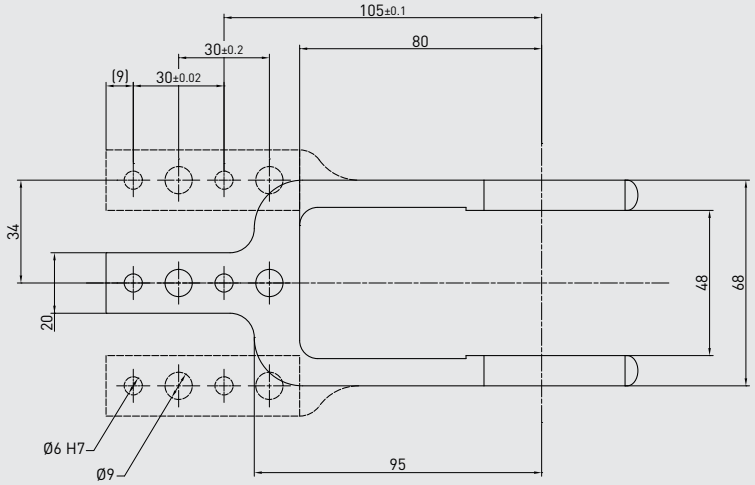

19 mm shaft - 25 mm offset

PART NO.	MATERIAL	VERSION	WEIGHT (kg)	MAX OP. ANGLE POS. 1	MAX OP. ANGLE POS. 2	MAX OP. ANGLE POS. 3	MAX OP. ANGLE POS. 4
B1921	Aluminum	Central	0.43	135°	115°	135°	80°
B1922	Aluminum	Central	0.44	135°	115°	135°	80°
B1923	Aluminum	Central	0.44	135°	115°	135°	80°

Screws: M6x25 **Tightening torque:** 10 N m / 7.37 lb ft

Subject to change without notice

* DIMENSIONAL TOLERANCE FOR DOWEL HOLES: ±0.02
DIMENSIONAL TOLERANCE FOR THREADED HOLES: ±0.1

REV. 00 - 12/05/2017

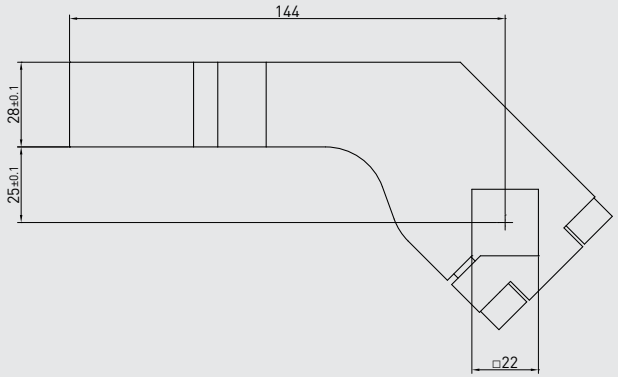

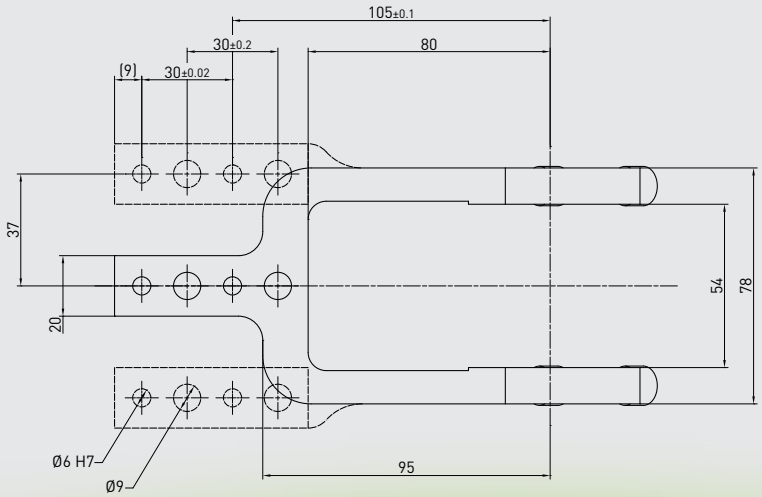

CLAMPING ARMS

22 mm shaft

25 mm offset for clamps' size 63 mm

22 mm shaft - 25 mm offset

PART NO.	MATERIAL	VERSION	WEIGHT (kg)	MAX OP. ANGLE POS. 1	MAX OP. ANGLE POS. 2	MAX OP. ANGLE POS. 3	MAX OP. ANGLE POS. 4
B2221	Aluminum	Central	0.55	135°	115°	135°	80°
B2222	Aluminum	Right	0.57	135°	115°	135°	80°
B2223	Aluminum	Left	0.57	135°	115°	135°	80°

Screws: M8x25 **Tightening torque:** 25 N m / 18.43 lb ft

Subject to change without notice

WHY PNX

CLAMPS AT WORK!

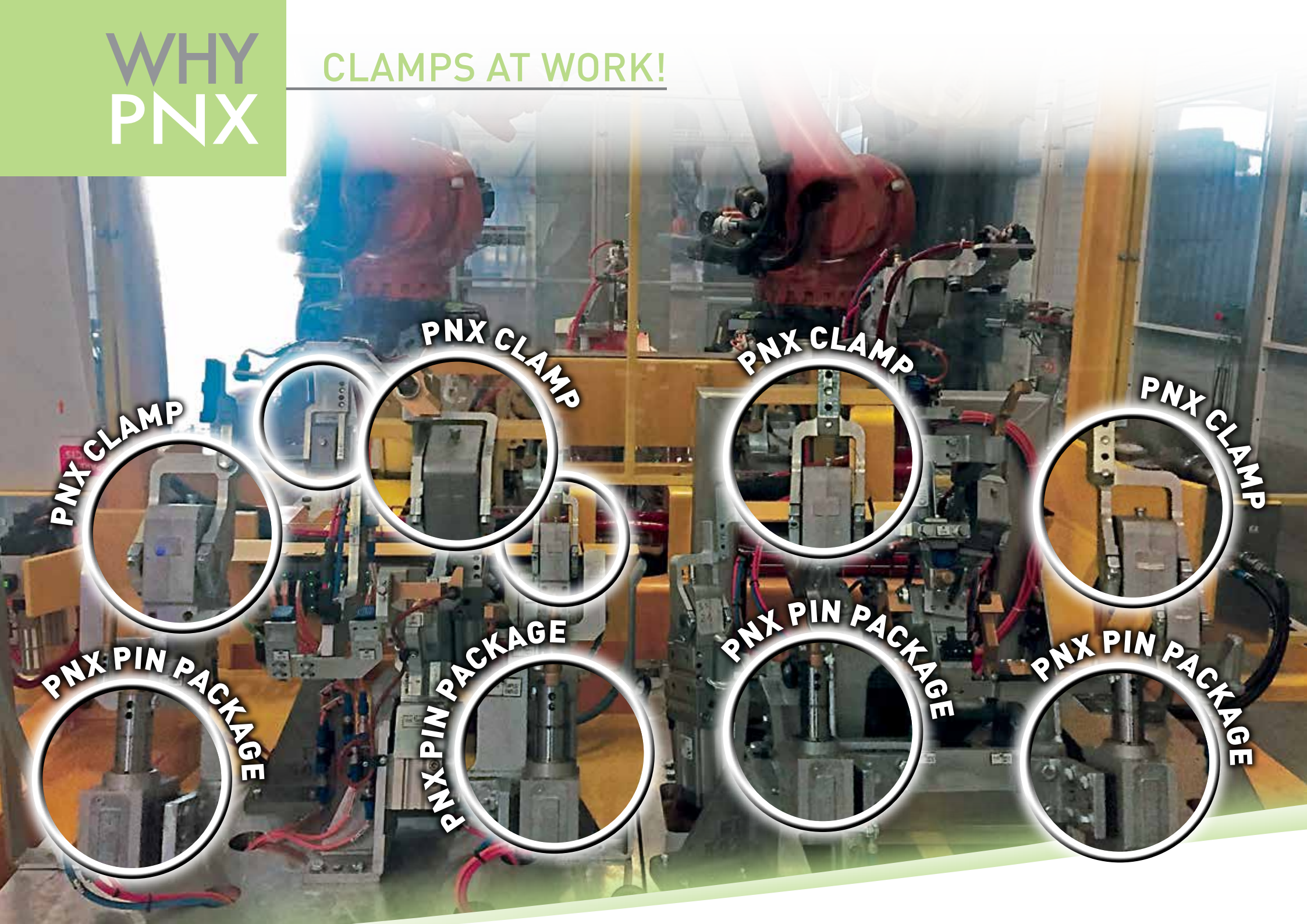

PNX CLAMP
PNX CLAMP
PNX CLAMP
PNX CLAMP
PNX CYLINDER
PNX CYLINDER
PNX VALVE MANIFOLD
PNX PRESSURE REGULATOR

WHY PNX

CLAMPS AT WORK!

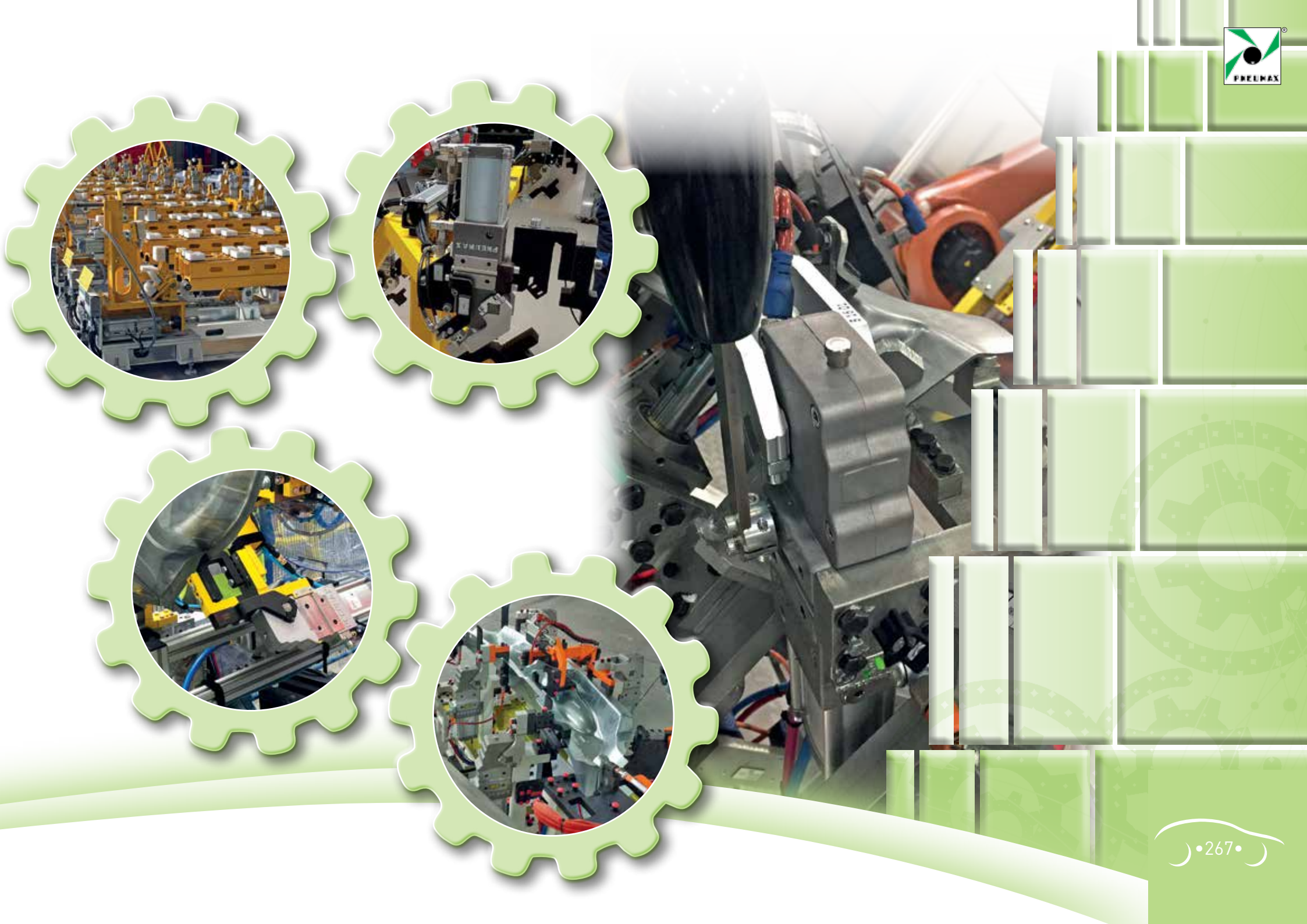

WHY PNX

PRINTED DOCUMENTATION

C_X SERIES

clamping

C-series

C1	C2
25 = Ø 25 mm	**50** = Ø 50 mm
32 = Ø 32 mm	**63** = Ø 63 mm
40 = Ø 40 mm	**80** = Ø 80 mm
50 = Ø 50 mm	
63 = Ø 63 mm	
80 = Ø 80 mm	

K-series

K1	K2
40 = Ø 40 mm	**50** = Ø 50 mm
50 = Ø 50 mm	**63** = Ø 63 mm
63 = Ø 63 mm	**80** = Ø 80 mm
80 = Ø 80 mm	

HE-series

HE1	HE2
0 = size 40 mm	**1** = size 50 mm
1 = size 50 mm	**2** = size 63 mm
2 = size 63 mm	**3** = size 80 mm
3 = size 80 mm	

handling

J-series

40 = Ø 40 mm

JK-series

40 = Ø 40 mm

locating

R-series

	Volvo
32 = Ø 32 mm	**50** = Ø 50 mm
50 = Ø 50 mm	**63** = Ø 63 mm
63 = Ø 63 mm	

RC-series

50 = Ø 50 mm
63 = Ø 63 mm

HP-series

50 = Ø 50 mm

F-series

40 = Ø 40 mm mounting pattern 35x25 mm
41 = Ø 40 mm mounting pattern 30x25 mm
63 = Ø 63 mm

pivoting

P-series

80 = Ø 80 mm
100 = Ø 100 mm
125 = Ø 125 mm

accessories

Shims
Spacers
Sensors
Sensor cables
Auto-retaining devices
Special design products
Ecolight cylinders with rodscrapers
Special arm types

PNEUMAX S.p.A.

Headquarters:

Via Cascina Barbellina, 10
24050 Lurano (BG), Italy

Tel. +39 035 41 92 777
Fax.+39 035 41 92 740

e-mail: automotive@pneumaxspa.com

For further technical details, please visit us at:
www.pneumaxspa.com/automotive

CAT10/GB – Rev. 04 12/2018

WIDE PRODUCT PORTFOLIO FOR AUTOMOTIVE

For further technical details, please visit us at:

www.pneumaxspa.com

PNEUMAX S.p.A.

Headquarters:

Via Cascina Barbellina, 10
24050 Lurano (BG), Italy
Tel. +39 035 41 92 777
Fax.+39 035 41 92 740
e-mail: automotive@pneumaxspa.com